nts MART

GLOBAL ONE-STOP FOODSERVICE & HOSPITALITY SOLUTIONS PROVIDER

EXPERIENCE 11 YEARS EXPERIENCE

- DESIGN
- EQUIPMENT
- SUPPLIES
- INSTALL
- SERVICE

FOODSERVICE SOLUTIONS













PUBLIC AREA SOLUTIONS







GUEST ROOM SOLUTIONS





KITCHEN SOLUTIONS



2021-2025
WWW.NTSMART.COM

OVER 30,000 FOODSERVICE AND HOSPITALITY PRODUCTS

©2010-2021 NTSmart Corporation. All rights reserved.

NTS MART OVERVIEW









NTS MART CHINA

No.28 Daganwei Road, South of Gongye Dadao,
Haizhu Dist., Guangzhou, Guangdong, China
Tel: +86-20-89301818/28/38
Email: nts@ntsmart.com
Website: www.ntsmart.com





NTS MART MYANMAR (Yangon)

No.(2), Shwe Gone Daing (2) Road, West Shwe
Gone Daing Quarter, Bahan Township, Yangon Myanmar
Tel: +95-1-7534400 Email: nts@ntsmyanmar.com.mm
Website: www.ntsmyanmar.com.mm





NTS MART MYANMAR (Mandalay)

Buliding (5),62th street, Between 38/39th,
Maha Aung Myay Township, Mandalay Myanmar
Tel: +95-9-775 966645 Email: nts@ntsmyanmar.com.mm
Website: www.ntsmyanmar.com.mm



NTS MART THAILAND

161/735-740 Soi Charansanitwong 27 Lane 22 Charansanitwong Rd., Bangkhunsri,
Bangkoknoi, Bangkok 10700 Thailand
Tel: +66-2-8667474 (auto) Email: sales@ntsmart.co.th
Website: www.ntsmart.co.th









NTS MART TANZANIA

Plots No. 66 Block'D', Msasani Village, Kinondoni District, Dar es salaam, Tanzania
Tel: +255-22-2700674/75
Email: ntstz@ntsmart.com
Website: www.ntsmart.com

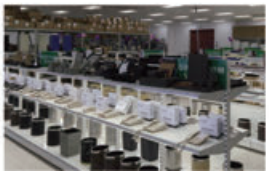



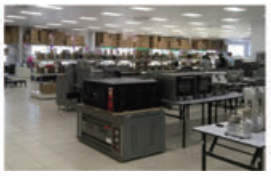

ABOUT NTS MART

NTS MART is a professional product supplier and project solution provider for restaurants and hotels, located in Guangzhou, China since 1998. We offer a bundle of value-added services including project consultant, drawing design, customization, product supply, logistic, equipment installation, maintenance and comprehensive after sale service to our customers.

We have 5000 square meter production workshop and 2000 square meter showroom in Guangzhou. Our product ranges are: kitchen equipment and utensils, bakery equipment, food processing equipment, refrigeration equipment, bar supplies, tableware. **NTS MART** has been providing products and services to more than 1,000 customers including restaurants, hotels, healthcare facilities, schools, hospitals, airlines, office buildings, and industrial facilities from all over the world.

Until now **NTS MART** has set up branches and showrooms in Thailand, Myanmar and Tanzania to fulfill the increasing demand for product diversification of global buyer and created a more convenient, more economical, more professional purchasing environment for our customers.

NTS MART Around The World

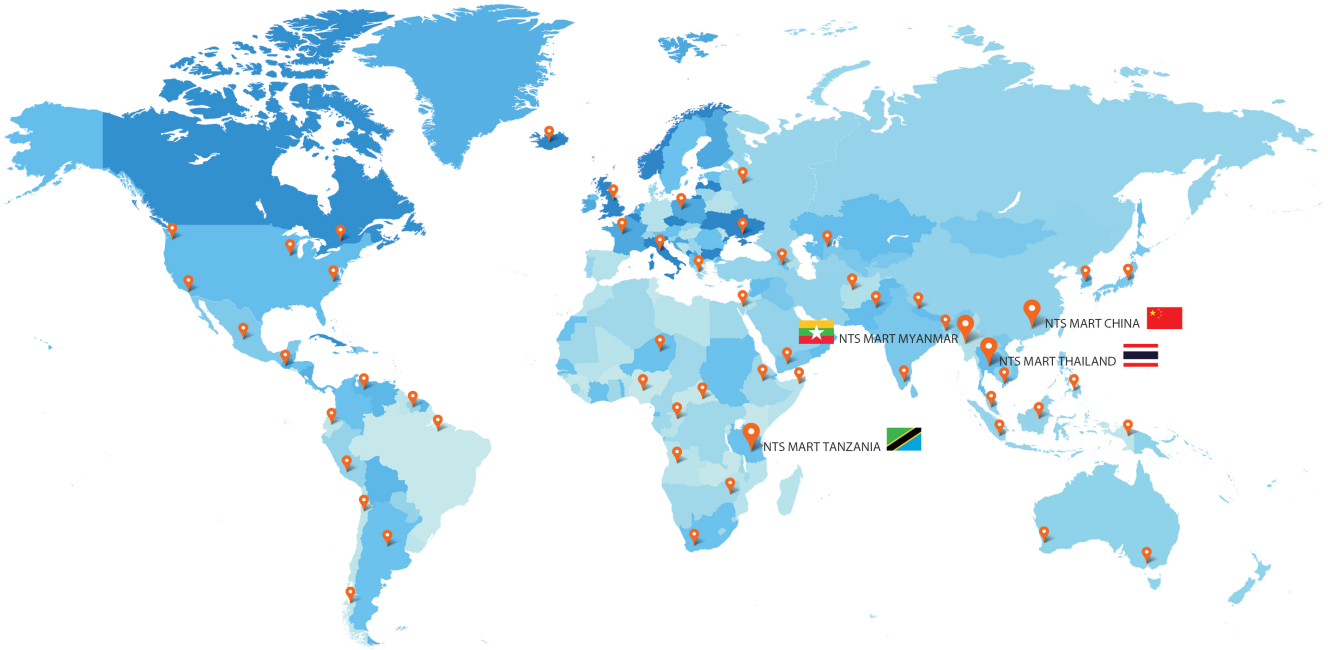

PROJECT DESIGN



SUPERIOR HOTEL AND CATERING SUPPLIES SOLUTIONS FROM START TO SERVICE

NTS MART has been providing hotel and catering supplies solutions and efficient services to customers for more than 10 years. By constantly enriching product categories and offering excellent service, **NTS MART** has provided an effective personalized hotel and catering supplies solutions to our various hotels and catering enterprises around the world.

NTS MART always takes ahead planning and service innovation as the core value of our enterprise. Relying on overseas branches and showrooms, E-commerce platform, we recommend a high quality hotel and catering supplies solutions to our clients. In the future, **NTS MART** will bring in more advanced after-sales market philosophy, industrial technology, products, design and services into our system, in order to let customers have more diversified, personalized service experience.


1 Project Research


2 Draft Design


3 Confirm Design


4 Examination & Approval


5 Final Drawing


6 Drawing Embedded


7 Production & Procurement


8 Transport & Installation


9 Test Run


10 Acceptance Check


11 Official Operation


12 After-sales Service



NTSmart CHINA Tel.+86-20-89301818/28/38 nts@ntsmart.com
NTSmart MYANMAR Tel.+95-1-7534400 nts@ntsmyanmar.com.mm
NTSmart THAILAND Tel.+66-2-8667474 sales@ntsmart.co.th
NTSmart TANZANIA Tel.+255-22-2700674/75 ntstz@ntsmart.com

SUCCESSFUL CASES

MYANMAR





THAILAND





TANZANIA





OVERSEA

CONTENTS

01 KITCHEN EQUIPMENT

Western Cooking Equipment

900 Modular Western Cooking Range

Burner	KE 001-002
Hot Plate Cooker	KE 003
Griddle	KE 003
Grill (Lava Rock/Radiant)	KE 004
Fryer	KE 004
Noodle Boiler	KE 005
Pasta Cooker	KE 005
French Top Hot Plate	KE 005
Bain Marie	KE 006
Tilting Pan	KE 006
Soup Kettle	KE 007
Wok Range	KE 007
Working Table	KE 007

800 Modular Western Cooking Range

Burner	KE 008
Griddle	KE 008
Grill (Lava Rock/Radiant)	KE 009
Fryer	KE 009
Noodle Boiler	KE 009

700 Modular Western Cooking Range

Burner	KE 010-011
Hot Plate Cooker / Ceramic Hob	KE 012
Griddle	KE 013
Grill (Lava Rock/Radiant)	KE 013
Fryer	KE 014
Noodle Boiler	KE 015
Pasta Cooker	KE 015
French Top Hot Plate	KE 015
Bain Marie	KE 016
Tilting Pan	KE 016
Soup Kettle	KE 017
Wok range	KE 017
Working Table	KE 017

600 Modular Western Cooking Range

Burner	KE 018
Hot Plate Cooker	KE 018
Griddle	KE 019
Grill	KE 019
Fryer	KE 020
Noodle Boiler	KE 020
Bain Marie	KE 021

400 Modular Western Cooking Range

Burner	KE 021
Hot Plate Cooker	KE 021
Griddle	KE 022
Grill	KE 022
Fryer	KE 023
Noodle Boiler	KE 024
Bain Marie	KE 024

Economy Cooking Range

Burner	KE 025
Burner with Griddle and Oven	KE 026
Fryer	KE 027
Counter Top Burner	KE 028
Counter Top Griddle	KE 029
Counter Top Radiant Broiler	KE 030
Stock Pot	KE 031
Salamander	KE 032
Floor Type Convection Oven	KE 032

Combi Oven

Electric/Gas Range Combi Oven	KE 033-039

Fast Food & Snack Equipment

Fast Food Equipment

Speed Oven	KE 040-041
Microwave Oven	KE 041-042
Pizza Oven	KE 042-044
Fryer	KE 044-047
Pressure Fryer	KE 048-049
Computerize Open Fryer	KE 050-051
Auto Lift Noddle Boiler	KE 052
Gas Noddle Boiler	KE 052

01 KITCHEN EQUIPMENT

Fast Food & Snack Equipment

Fast Food Equipment

Griddle	KE 053-055
Electric BBQ Grill	KE 055
Bain Marie	KE 056-058
Salamander	KE 058-059
Plate Warmer	KE 060
Cup Warmer	KE 060
Hot Cupboard	KE 061
Banquet Cart	KE 061
Pass Through Mobile Holding Cabinet	KE 062
Food Warmer	KE 062
Warming Plate	KE 062-063
Electrical Hob	KE 063
Burger Station	KE 063
Marinator	KE 064
Filter Cart	KE 064
Rotisserie	KE 064-065
Slow Cooker	KE 065
Kebab Machine with Kebab Slicer	KE 066

Snack Food Equipment

Panini Grill/ Contact Grill	KE 067-068
Waffle Baker	KE 069-071
Egg Waffle Maker	KE 072
Toaster	KE 072-073
Crepe Maker	KE 074
Hotdog Equipment	KE 074-076
Bun Warmer	KE 076-077
French Fries Station	KE 077
Oden Food Cooker	KE 077
Popcorn Maker	KE 078-079
Cotton Candy Mechine	KE 079-080
Gyoza Hot Plate	KE 081
Takoyaki Grill	KE 081

Chinese Cooking Range

Gas Burner

Gas Wok Range	KE 082-083
Asian Wok Range	KE 084
Gas Stock Pot	KE 085-086

Steamer

Gas Three Deck Steam Cabine	KE 087
Gas Single/ Double Steamer(Pot Type)	KE 088
Gas Single/ Double Steamer(Steam Generator Type)	KE 088-089
Gas Rice Roll Steamer	KE 089-090

Roaster

Duck Roaster	KE 090-091
Pig Roaster	KE 092

Rice Cooker

Gas Doube Door Rice Cabinet	KE 093
Gas Rice Cooker	KE 093
Electric Rice Cooker	KE 094
Deck Rice Cooker	KE 095
Automatic Rice Cooking Line	KE 095
Table Top Round Rice Cooker	KE 095

Induction Cooking Solution

Western Cooking

Induction Burner	KE 096
Induction Griddle	KE 096
Induction Fryer	KE 096
Induction Noddle Boiler	KE 097
Induction Auto-lift Noddle Boiler	KE 097
Induction Bain Marie	KE 098
Induction Soup Stove	KE 098
Electric BBQ Grill	KE 099

Chinese Cooking

Induction Chinese Wok Range	KE 099
Induction Seafood Steamer	KE 100
Induction Rice Steamer	KE 101
Induction Dim-sum Steamer	KE 101

Table Top Induction Hob

Table Top Induction Hob	KE 102-103

CONTENTS

02 KITCHEN SUPPORTING

	Page No.
Food Processing	
Meat Slicer	KS 001-003
Meat Mincer/Grinder	KS 003-004
Fresh Meat Slicer	KS 005
Meat Tenderizer/Stripper	KS 006
Cheese Grater/Chopper	KS 006
Bone Saw	KS 007
Vacuum Package Machine	KS 008-009
Sous Vide Cooking	KS 009-010
Hand Mixer	KS 011-013
Food Cutter	KS 014-015
Vegetable Cutter	KS 015-021
Bowl Cutter	KS 021
Patato Peeler	KS 021-022
Potato Chip Machine	KS 022
Tomato Slicer	KS 022
Garlic Ginger Onion Processors	KS 023
Soybean Milk Machine	KS 023
Noodle Making Machine	KS 023
Fruit Juice Extractor	KS 024-025
Hamburger Patty Machine	KS 026
Sausage Stuffer	KS 026
Vegetable Washer	KS 027
Vegetable Spin Dryer	KS 028
Refrigeration Equipment	
Commercial Kitchen Refrigeration	
Upright Chiller	KS 033/045/048
Upright Freezer	KS 034/045/049
Upright Dual Temperature	KS 035/046
Counter Dual Temperature	KS 036
Counter Chiller	KS 037-038/046/050-052
Counter Freezer	KS 039/047/053
Glass Door Chill/ Freezer	KS 040-041/054-055
Salad Preparation Counter	KS 042-043/056
Pizza Preparation Counter	KS 044/056-057
Sandwiches Preparation Counter	KS 057
Blast Freezer	KS 057
Walk in Cold Room	KS 058-059
Refrigeration for Super market & Store	
Comtomized Merchandisers Chiller and Freezer	KS 060-064
Comtomized Fresh Meat Counter	KS 065-066
Island Display Freezer	KS 067-069
Chest Freezer	KS 068-069
Store Chiller & Freezer	KS 070-073
Other Refrigeration equipment	
Bar Refrigerator	KS 074-075
Steak Ager Fridge	KS 075
Wine Showcase	KS 076-077
Ice Making Machine	
Cube Ice Machine	KS 078/081-082
Crescent Ice Machine	KS 079
Flake Ice Machine	KS 080
Ice Storage Bin	KS 081
Dishwashing	
Conveyor Type Dishwasher	KS 082/084
Undercounter Type Dishwasher	KS 083/084/085
Hood Type Dishwasher	KS 083/085
Channel Type Dishwasher	KS 086
Stainless Steel Fabricate Equipment	
Sink Table	KS 087-089
Work Table	KS 089-097
Storage Rack	KS 098-099
Storage Cabinet	KS 099
Work Top Cabinet	KS 100-101
Wall Shelf	KS 102
Wall Cabinet	KS 102-103
Solied Dish Table	KS 104
Clean Dish Table	KS 104-105
Hand Sink	KS 106-108
Exhaust Hood	
Normal Type Exhaust Hood	KS 109
Built-in Static Exhaust Hood	KS 109

02 KITCHEN SUPPORTING

	Page No.
Stainless Steel Fabricate Equipment	
Exhaust Hood	
Filter Type Exhaust Hood	KS 110
Island Type Exhaust Hood	KS 111-112
Vent Wash Exhaust Hood	KS 112
Pan Rack Trolley	KS 113
GN Pan Trolley	KS 114-115
Flat Truck	KS 115
Accessories	
Commerical Faucet	KS 116-128
Waste Drain	KS 128
Hose Reel Series	KS 129
Sink	KS 130
Sink Drainer	KS 131
Steam Pressure Safety Valves	KS 131
Bullet feet	KS 131
Gravity Pin	KS 132
Grease Trap	KS 132
Grease Filter for Exhaust Hood	KS 132
Hood Lamp	KS 133
Insect Killer	KS 133
Showcase & Display Equipment	
Warming Showcase	KS 134-138
Cake Showcase	KS 138-139
Ice Cream Showcase	KS 139-140
Bread Showcase	KS 140
Sushi Showcase	KS 140
Water Boiler	
Buffet & Self Service Series	KS 141
QSR Series	KS 141-142
Commercial Kitchen Series	KS 143-144

03 KITCHEN UTENSILS

	Page No.
Pan & Pot	
Stock Pot	KU 001
Sauce Pot	KU 002
Sauce Pot with Handle	KU 003-004
Fryer Pan	KU 004-005
Roast Pan	KU 005
Pasta Pot	KU 005-006
Water Pot	KU 006
Chinese Wok	KU 006-007
Chinese Wok Holder	KU 007
Kitchen Container	
Gastronorm Food Pan & Lid	KU 008-010
Perforated Gastronorm Food Pan	KU 011
PC Gastronorm Food Pan	KU 012-015
Kitchen Bowl	KU 015
Sauce Bucket	KU 016
Filter Basket	KU 017
Sauce Pot	KU 017
Sauce Boat	KU 017
Sugar Pot	KU 018
Dredger	KU 018
Cylinder Flatware Holder	KU 018-019
Chopstick Holder	KU 019-020
Water Jug	KU 020
Tea Pot	KU 020
Oil Pot	KU 020
Moltipurpose Container	KU 020-022
Knives & Tools	
Knives	KU 023-029
Knife Accessories	KU 029
Knives Holder / Case	KU 029-030
Knife Sterilizing Cabinet	KU 030
Kitchen Tools	KU 031
Spatula & Turner	KU 032-035
Ladle & Fryer Spatula	KU 035-037
Skimmer	KU 037
Funnel & Holder	KU 037

CONTENTS

03 KITCHEN UTENSILS

	Page No.
Knives & Tools	
Conical Strainer	KU 038-039
Noodle Basket	KU 039
Perforated Colander	KU 040
Vegetable Filter	KU 041
Whisk	KU 041
Gripper	KU 042
Lobster Cracker / Picker	KU 042
Grater	KU 043
Sauce Squeezer	KU 044
Mandoline	KU 044
Vegetable Cutter	KU 045
Can Opener	KU 045
Meat Tenderizer	KU 045
Shear	KU 046
Cheese Slicer	KU 046
Potato Cutter	KU 046
Fried Egg Mould	KU 046-047
Egg Slicer	KU 047
French Fries Sholve	KU 047
Tong	KU 047-048
Fishscale Scraper	KU 048
Pork Fork	KU 048
Meat Hook	KU 049
Bamboo Brush	KU 049
Sauce Syringe	KU 049
Measuing Cup	KU 050
Measuing Spoon	KU 050
Ice Scoop	KU 050
Ice Cream Scoop	KU 051
Flour Sieve	KU 051
Rolling Pin	KU 051-052
Thermometer	KU 052
Pepper Mill	KU 052-054
Oil Bottle	KU 054
Juice Presser	KU 055
Lemon Squeezer	KU 055
Potato Presser	KU 055
Glove	KU 055-056
Mesh Glove	KU 056
Order Pin	KU 056
Order Rack	KU 056
Chopping Board & Plane	KU 057-058
Chopping Board Rack	KU 058
Wooden Chopping Board Block	KU 058
Wooden Chopping Board	KU 058
Other Accessoriess	
Kitchen Counter Bell	KU 059
Condimen Dispenser	KU 059-060
Dish Cover	KU 060
French Fries Basket	KU 061
Steamer & Lid	KU 062
Roast Pig Holder	KU 063
Steamer Rack	KU 063
Steamer Piece	KU 063
Weighing Scale	KU 063-064
Meat Saw	KU 064
Dirty Dish Collecting Trolley	KU 064
Plate Rack	KU 065
Dish Caddy	KU 066
Bamboo Steamer & Lid	KU 066-067
Bamboo Steamer Silicon Mat	KU 068
Bamboo Sushi Mat	KU 068
Bamboo Sushi Boat	KU 068
Bamboo Filter	KU 068

04 BAKERY EQUIPMENT & UTENSILS

	Page No.
Bakery Equipment	
Spiral Mixer	BE 001
Planetary Mixer	BE 001
Cake Mixer	BE 002
Water Chiller	BE 002
Dough Divider & Rounder	BE 002
Dough Sheeter	BE 003

04 BAKERY EQUIPMENT & UTENSILS

	Page No.
Bakery Equipment	
Proofer	BE 004-006
Combination Oven	BE 006-007
Rotary Oven	BE 008
Deck Oven	BE 009-012
Convection Oven	BE 013-014
Bread Slicer	BE 015
Dough Rolling Pizza Machine	BE 015
Moulder (Toast & French Roll)	BE 015
Mini Proofer	BE 016
Mini Oven	BE 016
Hand Mixer	BE 016
Pan Rack Trolley	BE 016
Bakery Utensil	
Tray & Pan	
Baking Pan (Stick + Non-Stick)	BE 017-020
Baking Tray	BE 021-022
Cooling Rack	BE 023
Loaf Pan (Stick + Non-Stick)	BE 023-027
Pie Pan & Pizza Pan	BE 028-030
Baking Pan Trolley	BE 030
Ferment Basket	BE 031
Mould	
Multi-Link Mould	BE 031-032
Cake Mould	BE 033-037
Small Cake Mould	BE 037-041
Cannoli	BE 041
Silicone Mould	BE 041-042
Chocolate Mould	BE 043-045
Ice Mould	BE 045
Mousse Ring	BE 045-050
Knives & Tools	
Tong	BE 050-051
Dough Wheel	BE 052
Pizza Wheel	BE 052
Cutting Wheel	BE 053
Can Opener	BE 053
Wool Brush	BE 053-054
Dough Scraper	BE 054-055
Spatula	BE 055
Carving Knives	BE 055
Cake Slicer	BE 056
Egg Separater	BE 056
Egg Knock	BE 056
Melon Baller	BE 056-057
Chocolate Scraper	BE 057-058
Lemon Zester	BE 058
Shear	BE 058
Flour Scoop	BE 058
Rolling Pin	BE 059
Flour Stirrer	BE 060
Funnel & Stand	BE 061
Silicone Mat	BE 061
Cutter	BE 061
Flour Container	BE 062
Whisk	BE 062-063
Mixing Bowl	BE 063
Measuring Cup	BE 063-064
Measuring Spoon	BE 064
Thermometer	BE 064-065
Saccharometer	BE 065
Oven Mitt	BE 065
Pastry Tip	BE 066-067
Pastry Bag	BE 068
Pastry Bag Rack	BE 068
Pizza Board	BE 068-069
Pastry Display	
Tag Holder	BE 069-070
Plastic Tray	BE 070
Bread Basket	BE 071-072
Cake Stand	BE 073
Cake Display Tray	BE 073-074

CONTENTS

05 COFFEE & BAR SUPPLIES — Page No.

Coffee & Bar Equipment

Coffee Machine	CB 001-004
Coffee Grinder	CB 004-005
Coffee Boiler & Warmer	CB 005-006
America Coffee Machine	CB 006
Blender	CB 007-010
Hot Drink Dispenser	CB 010
Ice Crusher	CB 011
Juice Dispenser Mixing	CB 011-012
Slush Machine	CB 013
Ice Cream Machine	CB 014-016
Pearl Cooker	CB 017
Tea Warmer	CB 017
Milk Shaker	CB 017-018
Water Treatment	CB 019
Cup Sealing Machine	CB 019
Fructose Dispensing Machine	CB 020

Coffee & Bar Utensils

Jigger	CB 020
Milk Frother	CB 020
Coffee Pot	CB 020
Milk Jug	CB 021
Coffee Knock Box	CB 021
Coffee Tamper	CB 022
Coffee Scale	CB 022
Table Can Opener	CB 022
Ice Bucket	CB 022-024
Tong	CB 024
Champagne Bucket With Stand	CB 024
Cocktail Sharker	CB 025
Plastic Sharker	CB 025
Ice Strainer	CB 025
Ice Tong	CB 025
Bar Spoon	CB 026
Bottle & Wine Opener	CB 026
PC Scoop	CB 026
Compartment Holder	CB 026-027
Bar Muddler	CB 027
Whiskey Pourer	CB 027
Measure Pourer	CB 028
Store & Pourer	CB 028
Squeeze Dispenser	CB 028
Flair Bottle	CB 028
PC Jug	CB 029
Glass Rack & Cutlery Rack	CB 029-032
Storage Contianer	CB 032-033
Cup Brush	CB 033

Bar Serving Accessories

Non Slip Serving Tray	CB 033
Non Slip Serving Tray Rack	CB 034
Stianless Steel Serving Tray	CB 034-035
Plastic Serving Tray	CB 035
Bar Mat	CB 036
PC Cup	CB 036-042
PC Tong	CB 043
Glass Rimmer	CB 043
Bar Caddy	CB 043
PC Dish Cover	CB 044
Drink Server	CB 045
Food Warmer Cart	CB 046-047
Ice Caddy	CB 047

06 RESTAURANT TABLEWARE & BUFFET — Page No.

Ceramic Tableware

Bone China	RT 001-014
High Temperature Ceramic	RT 015-019

Melamine Tableware

Fast Food Restaurant Melamine	RT 020-028
Japanese Restaurant Melamine	RT 028-036

Glassware

Libbey Brand Glassware	RT 037-059
Chinese Brand Glassware	RT 059-075

06 RESTAURANT TABLEWARE & BUFFET — Page No.

Flatware

Stainless Steel 304	RT 076-078
Stainless Steel 201	RT 078-083
Stainless Steel 430	RT 084-089

Buffet Tableware

Heat Lamp Station	RT 090-091
Toaster	RT 092
Conveyor Toaster	RT 092
Bain Marie	RT 093
Chafing Dish	RT 094-099
Optional Accessories for Chafing Dish	RT 099-100
Soup Warmer	RT 101
Juice Dispenser/ Milk Urn / Coffee Urn	RT 101-103
Cereal Dispenser	RT 104
Chocolate Fountain	RT 104
Water Boiler	RT 105-106
Induction Cooker	RT 106-107
Beer Dispenser	RT 107
Plate Warmer	RT 107-108
Cup Warmer	RT 108
Buffet Display	RT 108-113
Pot (Vacuum Pot & Cold drink Jug)	RT 113-114
Sugar Bowl	RT 114-115
Tong	RT 115-116
Tong Holder	RT 117
Dish Cover	RT 117
Egg Cup	RT 118
Pepper Mill	RT 118-119
Oil Pot	RT 119
Tag Holder	RT 119-120
Reservation Sign	RT 121
Kitchen Counter Bell	RT 121
Table Lamp	RT 121
Placemat	RT 122
Flatware Holder	RT 122
Chopstick	RT 123
Chopstick Holder	RT 123-124
Wine Rack	RT 124
Straw Dispenser	RT 125
Napkin Holder	RT 125
Napkin Ring	RT 125
Baby Chair	RT 125

07 CLEANING PRODUCTS — Page No.

Cleaning Solution

Office Building Cleaning Solution	CL 001-003
Public Toilet Cleaning Solution	CL 004-006
Hospital Cleaning Solution	CL 007-010
Airport & Railway Station Cleaning Solution	CL 011-014

Cleaning Equipment

Scrubber	CL 015-018
Back Pack Vacuum Cleaner	CL 018
Sofa Maintainer	CL 019
Dry Only Vacuum Cleaner	CL 020
Wet & Dry Vacuum Cleaner	CL 020-021
Brushing Machine	CL 021-023
Blower	CL 023

Cleaning Tools

Mop Bucket Trolley	CL 023
Mop	CL 024-025
Squeegee	CL 025-026
Floor Brush	CL 026
Telescope Pole	CL 026
Window Squeegee	CL 027
Cotton Window Wiper	CL 027
Broom	CL 027
Plastic Rubbish Shovel	CL 028
Glass Scrape	CL 028
Duster	CL 028
Sign Board	CL 028
Microfiber Cloth	CL 029
Floor Pad	CL 029
Pick Up Tools	CL 029

CONTENTS

07 CLEANING PRODUCTS — Page No.

Cleaning Tools

Tool Bucket	CL 029-030
Foot Pedal	CL 030
3 Layer Cart	CL 030
Plastic Trolley	CL 030
Collector Cart	CL 030
Linen Trolley	CL 031
Guest Room Service Cart	CL 031
Dust Bin	CL 031-034

Entrance Mat System

Debris Trap Plus	CL 037
Z-Grid Plus	CL 038
Heavy Traffic Loop Mat	CL 038-039
Aqua Crystal	CL 039
Fish Bone	CL 040
Scrape Rib	CL 040
Cut Pile	CL 041
Aqua Crystal Logo Mat	CL 042
Loop Logo Mat	CL 042-043

Wet Area Mat

V-Deck	CL 043
Kitchen Guard	CL 044
Wet Star	CL 044

08 HOTEL LOBBY & GUEST ROOM SUPPLIES — Page No.

Guestroom Supplies

Safe Box	HL 001-002
Mini Bar	HL 003
Torch	HL 004
Telephone	HL 004
Hair Dryer	HL 005
Kettle	HL 006
Leather Set	HL 007-010
Acrylic Set	HL 011-012
Hanger	HL 013-014
Shoe Horn	HL 014
Bluetooth Alarm Clock	HL 014
Iron & Iron Holder	HL 015
Guestroom Dust Bin	HL 015
Scale	HL 016
Umbrella	HL 016
Hang Tag	HL 016
Luggage Rack	HL 016
Extra Bed	HL 017
Mattress	HL 018-022

Bathroom Supplies

Amenities Tray	HL 023
Shaving Mirror	HL 023
Clothes Line	HL 024
Paper Holder	HL 024
Bathroom Hardware	HL 025-031
Bathroom Dust Bin	HL 031-032
Paper Towel Dispenser	HL 032
Bath Mat	HL 032
Soap Dispenser	HL 033
Hand Dryer	HL 033
Wall Mounted Skin Dryer	HL 034
Laundry Basket	HL 034

Linen

Bed Sheet	HL 034
Quilt Cover	HL 035
Quilt	HL 035
Pillow	HL 035
Pillow Case	HL 036
Mattress Protector	HL 036
Face Towel	HL 036
Bath Mat	HL 036
Bath Towel	HL 036
Hand Towel	HL 036
Bathrope	HL 037
Slipper	HL 037

08 HOTEL LOBBY & GUEST ROOM SUPPLIES — Page No.

Linen

Linen Maintenance	HL 038
Linen Producing Process	HL 039

Room Amenities

Room Amenities	HL 040-044

Lobby Supplies

Luggage Cart	HL 045-046
Railing Stand	HL 047
Railing Rope	HL 047
Lobby Rubbish Bin	HL 048
Sign Board	HL 049
Outdoor Dust Bin	HL 050
Newspaper Rack	HL 051
Umbrella Rack	HL 051
Shoe Polish Machine	HL 051

09 LAUNDRY EQUIPMENT — Page No.

Industrial Washer

Fully Automatic Tilting Type Intelligent Washer Extractor	LE 001
Fully Automatic Industrial Washer Extractor	LE 002
Fully Automatic Isolated Washer Extractor	LE 003
Horizontal Semi Automatic Industrial Washing Machine	LE 003

Industrial Dryer

Fully Automatic Tumble Dryer	LE 004
Hydro Extractor	LE 005

Industrial Dry Cleaning Machine

Industrial Dry Cleaning Machine	LE 006

Folding Machine

Folding Machine	LE 006

Industrial Ironing Machine

Flatwork Ironer	LE 007-008

Auxiliary Machine

Stain Removal Table	LE 009
Ironing Table	LE 009-010
Steam Presser	LE 010-011
Collar & Sleeve Steam Presser	LE 011
Form Finisher	LE 012
Clothes Disinfection Cabinet	LE 012
Clothes Packing Machine	LE 012
Steam Generator	LE 013
Clothes Conveyor Machine	LE 013
Steam Ironer	LE 014
Air Compressor	LE 014

10 FURNITURE — Page No.

Guestroom Customize Furniture

Successful Case	FU 001-011

Dining Room Furniture

Banquet Table	FU 012-016
Multifunction Chair	FU 016-018
Coffee & Bar Table & Chair	FU 019
Mobile Stage	FU 019-020
Trolley	FU 020
Lazy Susan	FU 020

Outdoor Furniture

Rattan Furniture	FU 021
Plastic Wood Furniture	FU 021
Sectional Sofa	FU 022
Lounge Chair & Table	FU 022
Cradle	FU 023
Outdoor Umbrella	FU 023-025
Gazebo	FU 025

STANDARD ICON DIRECTORY

It certifies that the electrical and electronic equipment do not contain levels of lead, cadmium, mercury, hexavalent chromium, polybrominated biphenyls (PBB) and polybrominated diphenylethers (PBDEs) above the legally permitted limit

ISO9001: certification of the management system

All the machine components in contact with water and steam undergo the Ruveco Teck coating process which drastically reduces the risk of release of metals in the delivered beverages

The CSQ-CERT certification body offers complex services in the field of Environmental Management System according to the ISO14001

The CSQ-CERT certification body offers complex services in the field of Quality Management System according to the IS09001

Listed by the National Sanitary. Foundation. NSF, an independent testing organization, lists products which meet their criteria for sanitation and cleanability Certification of products and materials intended for contact with food and drinking water on the U.S. market

The Canadian Standards Association(CSA) is a nonprofit association serving business, industry, government and consumers in Canada and the global marketplace.

Conformance European With the CE mark, which is obligatory in the European Union member countries, the manufacturer states that the individual product is compliance with the general safety regulations in the CE-marking directives.

Underwriters Laboratories The UL Listing Mark attests that products have been tested and evaluated according to the US safety standards

The cUL Listing Mark attests that products have been tested and evaluated according to the Canedian safety standards

The C UL US Listing Mark attests that products have Canadian safety standards

The UL EPH mark appear on products that have been evaluated to Environmental and Public Health Standards. The "Classified" version is used for products complying with ANSI/NSF Standards and other food equipment hygiene codes and requirements. Examples include Food Service and Meat and Poultry Plant Equipment and Drinking Water Additives. The "Listed" version is typically used for products complying with UL's own published EPH Standards for Safety.

ETL Testing Laboratories

The Eco-design Directive for Energy-using Products (2005/32/EC) was adopted in 2005 and came Into force in August 2007. It establishes a framework under which manufacturers of energy-using products (EuP) will, at the design stage,be obliged to reduce the energy consumption and other negative environmental impacts that occur during the product's life cycle. This is an article 95 directive which means adoption will be aligned in all member states.

Registration, Evaluation, Authorization and Restriction of Chemicals

Restriction of Hazardous Substances, RoHS is the standard used to make sure certain substances are not used in electronic products. The legislation limits use of lead, polybrominated diphenyl ethers, mercury, hexavalent chromium, cadmium and polybrominated biphenyls.

The International "emc-Mark" appears on products meeting the electromagnetic compatibility requirements of Europe, the United States, Japan, Australia, or any combination of the four.In the United States, some types of products can't be sold without proof of compliance to U.S. electromagnetic compatibility requirements. The types of products that are subject to EMC testing include medical and dental equipment, computers, microwave ovens, televisions, radios, transmitters, and radio-controlled equipment

Products have been designed and manufactured to comply with any ad all specifications set out by the Australian Communications Authority(ACA) in regards to Electromagnetic Compatibility. As testament to such compliance these units bear the C-Tick symbol

Norway - NEMKO
(Norwegian Board for Testing and Approval of Electrical Equipment) The recognized association for Norwegian standards is the Norwegian Electrotechnical Committe (NEK). NEK starndards are identical to IEC and CENELEC.
The NEMKO mark molded into a plug or connector indicates that a product has been tested and approved by NEMKO.

ISO 9001:2008 certification has been in place for over a decade now and is used by both customers and companies as a method of controlling their quality. The Standard provides a framework to manage your business and ensure a philosophy of continual improvement in all aspects of your business.

The China Compulsory Certificate (CCC), which is obligatory, attests that products are complying with Chinese standards

Every operation serving or selling food needs to have a food safety system in place that is designed specifically to guarantee the food being served is safe to eat.This specific food safety system is called HACCP for hazard analysis and critical control point.



WEIGHT & MEASURES

(American and British English usage, with approximate metric equivalents)

Linear Measurement

1 centimeter (cm)	10 millimeters (mm)
1 meter (m)	100 centimeters (cm)
1 kilometer (km)	1000 meters (m)
1 foot (ft)	12 inches (in)
1 yard (yd)	3 feet (ft)
1 yard (yd)	36 inches (in)
1 mile (mi)	1760 (yd)
1 millimeters (mm)	0.03937 inches (in)
1 centimeters (cm)	0.39370 inches (in)
1 meter (m)	39.37008 inches (in)
1 meter (m)	3.28084 feet (ft)
1 meter (m)	1.09361 yards (yd)
1 kilometer (km)	1093.6133 yards (yd)
1 kilometer (km)	0.62137 miles (mi)
1 inch (in)	2.54 centimeters (cm)
1 foot (ft)	30.48 centimeters (cm)
1 yard (yd)	91.44 centimeters (cm)
1 yard (yd)	0.9144 meters (m)
1 mile (mi)	1609.344 meters (m)
1 mile (mi)	1.609344 kilometers

Square Measurement

1 sq centimeters (cm^2)	100 sq millimeters (sq mm)
1 sq meter (m^2)	10000 sq centimeters (cm^2)
1 hectare (ha)	10000 sq meters (m^2)
1 sq kilometer (km^2)	100 hectare (ha)
1 sq kilometer (km^2)	1 million sq meters (m^2)
1 sq foot (ft^2)	144 sq inches (in^2)
1 sq yard (yd^2)	9 sq feet (ft^2)
1 acre	4840 sq yards (yd^2)
1 acre	43560 sq feet (ft^2)
1 sq mile (mi^2)	640 acres
1 sq centimeters (cm^2)	0.15500 sq inches (in^2)
1 sq meter (m^2)	10.76391 sq feet (ft^2)
1 sq meter (m^2)	1.19599 sq yards (yd^2)
1 hectare (ha)	2.47105 acres
1 sq kilometer (km^2)	0.386102 sq miles (mi^2)
1 sq inch (in^2)	6.4516 sq centimeters (cm^2)
1 sq foot (ft^2)	929.0304 sq centimeters (cm^2)
1 sq foot (ft^2)	0.09290 sq meters (m^2)
1 sq yard (yd^2)	0.83613 sq meters (m^2)
1 acre	0.40469 hectares (ha)
1 sq mile (mi^2)	258.99881 hectares (ha)
1 sq mile (mi^2)	2.589988 sq kilometers (km^2)

Comparison table of the tube size and tube diameter

1/4 in	0.635 cm
3/8 in	0.950 cm
1/2 in	1.270 cm
3/4 in	1.900 cm
1 in	2.540 cm
1 1/4 in	3.180 cm
1 1/2 in	3.810 cm
2 in	5.080 cm
3 in	7.620 cm
3 1/2 in	8.910 cm
4 in	0.20 cm
4 1/2 in	1.40 cm
6 in	15.20 cm
8 in	20.30 cm

Cubic Measure(Volumes)

1 cubic centimeter (cm^3)	1000 cubic millimeters (cu mm)
1 cubic meter (m^3)	1 million cubic centimeters (cm^3)
1 cubic foot (ft^3)	1728 cubic inches (in^3)
1 cubic yard (yd^3)	46656 cubic inches (in^3)
1 cubic yard (yd^3)	27 cubic feet (ft^3)
1 cubic centimeter (cm^3)	0.60102 cubic inches (in^3)
1 cubic meter (m^3)	35.31467 cubic feet (ft^3)
1 cubic meter (m^3)	1.30795 cubic yards (yd^3)
1 cubic inch (in^3)	16.38706 cubic centimeters (cm^3)
1 cubic foot (ft^3)	0.02832 cubic meters (m^3)
1 cubic yard (yd^3)	0.76455 cubic meters (m^3)

Mass (Weight)

1 milligram (mg)	0.015 grain
1 centigram	10 milligram/0.154 grain
1 decigram	100 milligram/1.543 grain
1 gram (g)	1000 milligrams
1 kilogram (kg)	1000 grams (g)
1 tonne (1 megagram)	1000 kilograms (kg)
1 grain	0.065 grams (g)
1 dram (dr)	1.772 grams (g)
1 ounce (oz)	16 drams (dr)
1 pound (id)	16 ounces (oz)
1 stone	6.35 kilograms /14 pounds
1 hundred weight (cwt)	100 pounds (ib)
1 ton (short)	20 hundred weight (cwt)
1 ton (short)	200 pound (ib)
1 gram (g)	0.035274 ounce (oz)
1 kilogram (kg)	2.20462 pound (ib)
1 kilogram (kg)	35.27396 ounce (oz)
1 tonne	1.10231 ton,short
1 ounce (oz)	28.34952 grams (g)
1 pound (ib)	453.59237 grams (g)
1 pound (ib)	0.45359 grams (g)
1 hundred weight (cwt)	50.8023 kilograms (kg)
1 ton (short)	0.90718 tonnes

Liquid Volume

1 tablespoon (tbsp)	3 tablespoons (tsp)
1 fluid ounce (fl oz)	2 tablespoons (tbsp)
1 fluid ounce (fl oz)	8 drams (dr)
1 cup (c)	8 fluid ounce
1 quart (qt)	2 pints
1 gallon (gal)	4 quart (qt)

Capacity measurement

1 pint	20 fluid ounces
	34.68 in^3
	0.568 litre
1 gallon	4 quart
	4.546 litre
1 peck	2 gallon
	9.092 litre
1 bushel	4 peck
	36.4 litre
1 quarter	8 bushel
	2.91 litre

VOLTAGE & PLUG

Voltage Reference

Voltage	Countries & Places
100V	JAPAN, KOREA
110~130V	TAIWAN CHINA, USA, CANADA, MEXICO, PANAMA, CUBA, LEBANON
200V	HONGKONG
220~230V	CHINA, UK, DEUTSCHLAND, FRANCE, ITALY, AUSTRALIA, INDIA, SINGAPORE, THAILAND, NETHERLAND, SPAIN, GREECE, AUSTRIA, PHILIPPINE, NORWAY, TANZANIA

Plug Reference



Plug Types In Different Places

American Plug Types



Chinese Plug Types



European Plug Types



U.K. & Hongkong Plug Types



NTSmart CHINA Tel.+86-20-89301818/28/38 nts@ntsmart.com
NTSmart MYANMAR Tel.+95-1-7534400 nts@ntsmyanmar.com.mm
NTSmart THAILAND Tel.+66-2-8667474 sales@ntsmart.co.th
NTSmart TANZANIA Tel.+255-22-2700674/75 ntstz@ntsmart.com

TEMPERATURES FOR FOOD SAFENESS

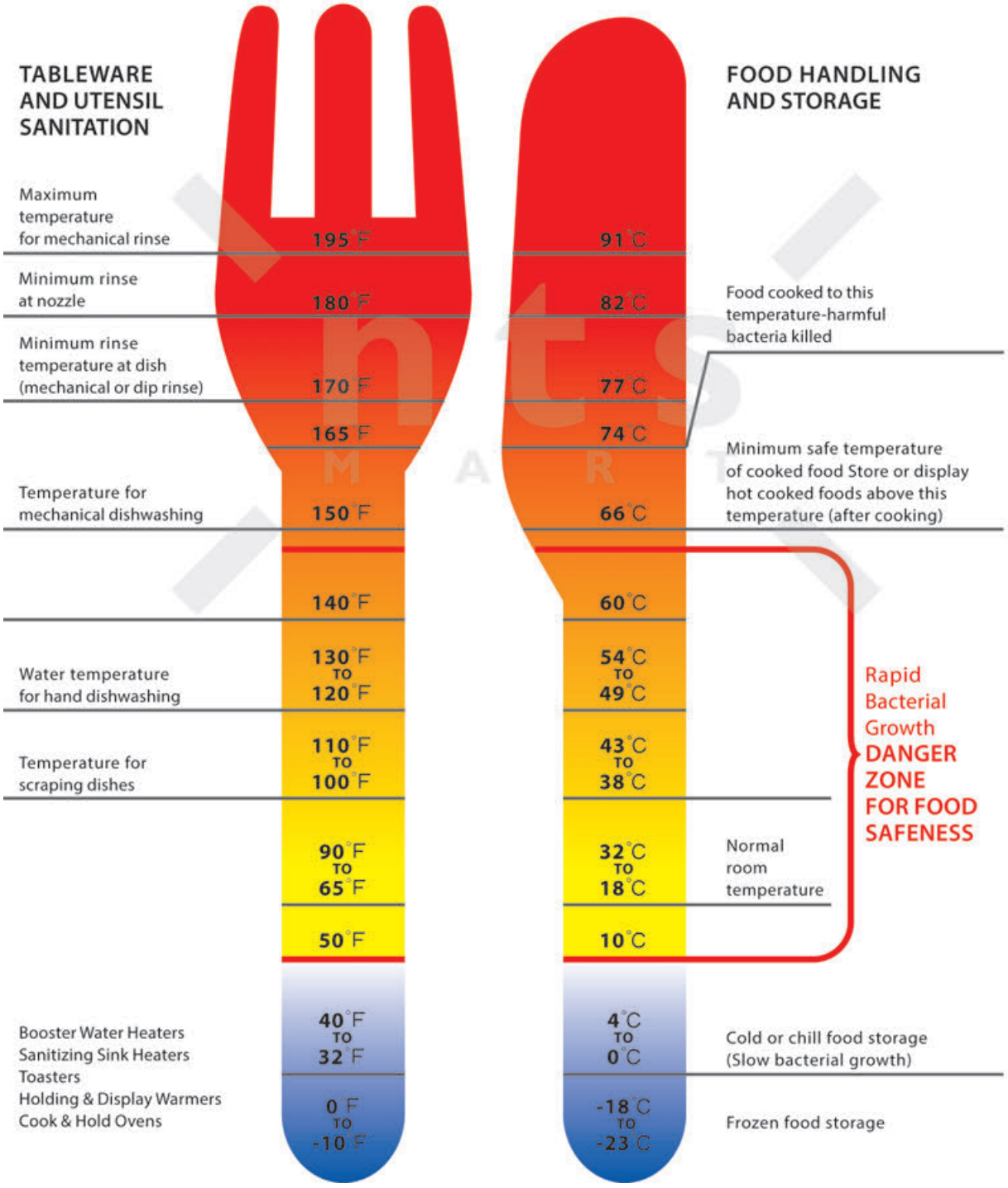

COOPERATIVE BRANDS



nts MART

GLOBAL ONE-STOP
FOODSERVICE & HOSPITALITY
SOLUTIONS PROVIDER

KITCHEN SUPPORTING



No. 02

www.ntsmart.com

©2010-2021 NTSmart Corporation. All rights reserved.



KITCHEN SUPPORTING

Food Processing

- Meat Slicer 001-003
- Meat Mincer/Grinder 003-004
- Fresh Meat Slicer 005
- Meat Tenderizer/Stripper 006
- Cheese Grater/Chopper 006
- Bone Saw 007
- Vacuum Package Machine 008-009
- Sous Vide Cooking 009-010
- Hand Mixer 011-013
- Food Cutter 014-015
- Vegetable Cutter 015-021
- Bowl Cutter 021
- Patato Peeler 021-022
- Potato Chip Machine 022
- Tomato Slicer 022
- Garlic Ginger Onion Processors 023
- Soybean Milk Machine 023
- Noodle Making Machine 023
- Fruit Juice Extractor 024-025
- Hamburger Patty Machine 026
- Sausage Stuffer 026
- Vegetable Washer 027
- Vegetable Spin Dryer 028

Refrigeration Equipment

Commercial Kitchen Refrigeration

- Upright Chiller 033/045/048
- Upright Freezer 034/045/049
- Upright Dual Temperature 035/046
- Counter Dual Temperature 036
- Counter Chiller 037-038/046/050-052
- Counter Freezer 039/047/053
- Glass Door Chill/ Freezer 040-041/054-055
- Salad Preparation Counter 042-043/056
- Pizza Preparation Counter 044/056-057
- Sandwiches Preparation Counter 057
- Blast Freezer 057
- Walk in Cold Room 058-059

Refrigeration for Super Market & Store

- Comtomized Merchandisers Chiller and Freezer 060-064
- Comtomized Fresh Meat Counter 065-066
- Island Display Freezer 067-069
- Chest Freezer 068-069
- Store Chiller and Freezer 070-073

Other Refrigeration Equipment

- Bar Refrigerator 074-075
- Steak Ager Fridge 075
- Wine Showcase 076-077

Ice Making Machine

- Cube Ice Machine 078/081-082
- Crescent Ice Machine 079
- Flake Ice Machine 080
- Ice Storage Bin 081

Dishwashing

- Conveyor Type Dishwasher 082/084
- Undercounter Type Dishwasher 083/084/085
- Hood Type Dishwasher 083/085
- Channel Type Dishwasher 086

Stainless Steel Fabricate Equipment

- Sink Table 087-089
- Work Table 089-097
- Storage Rack 098-099
- Storage Cabinet 099
- Work Top Cabinet 100-101
- Wall Shelf 102
- Wall Cabinet 102-103
- Solied Dish Table 104
- Clean Dish Table 104-105
- Hand Sink 106-108

Exhaust Hood

- Normal Type Exhaust Hood 109
- Built-in Static Exhaust Hood 109
- Filter Type Exhaust Hood 110
- Island Type Exhaust Hood 111-112
- Vent Wash Exhaust Hood 112
- Pan Rack Trolley 113
- GN Pan Trolley 114-115
- Flat Truck 115

Accessories

- Commerical Faucet 116-128
- Waste Drain 128
- Hose Reel Series 129
- Sink 130
- Sink Drainer 131
- Steam Pressure Safety Valves 131
- Bullet feet 131
- Gravity Pin 132
- Grease Trap 132
- Grease Filter for Exhaust Hood 132
- Hood Lamp 133
- Insect Killer 133

Showcase & Display Equipment

- Warming Showcase 134-138
- Cake Showcase 138-139
- Ice Cream Showcase 139-140
- Bread Showcase 140
- Sushi Showcase 140

Water Boiler

- Buffet & Self Service Series 141
- QSR Series 141-142
- Commercial Kitchen Series 143-144



Meat Slicer (MIRRA SERIES SLICER)

- Fine polishing, anodizing treatment Hygienic and long lasting
- Plexiglass hand guard
- Hilt on product pusher handle
- Forged, hardened large thickness blades. Long lasting and easy to sharpen cutting edge
- Microswitch on blade cover
- Cast-in sharpner assembly is standard for all slicers bigger than 220 A.I. Easy and precise sharpening
- Bottom schield
- Reliable poliV belt drive. Great reliability, silent running and easy servicing
- Asynchronous 6 poles motors. Strong, reliable and silent running
- Made of PERALUMAN cast aluminium alloy. Strong, reliable and silent running
- Carriage running on self-lubricating bushes. Long lasting sliding performances
- CE Professional slicers. Removable carriage and thickness gauge blocking device Easy and safe to clean
- CE Professional slicers
- IP 44 (54, 67) switches and NVR (No Volt Release) device. Safety device against accidental switching on.



Mirra 220 C
Code: 0300500472



Mirra 250 C
Code: 0300500473



Mirra 275 C
Code: 0300500474



Mirra 300 Y09
Code: 0300500475

Sirman Code	Code	Product Size	Blade Dia	Power	Voltage
Mirra 220 C	0300500472	570x560x475mm	9" / 220mm	147 W/ 0.2 hp	220 V/ 50 Hz
Mirra 250 C	0300500473	570x560x475mm	10" / 250mm	147 W/ 0.2 hp	220 V/ 50 Hz
Mirra 275 C	0300500474	570x560x475mm	11" / 275mm	147 W/ 0.2 hp	220 V/ 50 Hz
Mirra 300 Y09	0300500475	640x610x510mm	12" / 300mm	210 W/ 0.29 hp	220 V/ 50 Hz

Meat Slicer (TOPAZ SERIES SLICER)

- Anodized cast aluminum alloy.
- Lat base for easy cleaning.
- Strong and silent-running asynchronous motor.
- Reliable poliV belt drive.
- Forged, hardened large thickness blades.
- Carriage running on self-lubricating bushes.
- Cast-in sharpener is standard for all models bigger than 220 A.I.
- Teflon coated or toothed blades are available on demand.
- 25° blade inclination.
- Equipped with Hand guard
- Bottom Schield



Topaz 195
Code: 0300500476



Topaz 220
Code: 0300500477



Topaz 250
Code: 0300500478



Topaz 275
Code: 0300500479

Sirman Code	Code	Product Size	Blade Dia	Power	Voltage
Topaz 195	0300500476	385x355x360mm	8" / 195mm	110W/0.15 hp	220 V/ 50 Hz
Topaz 220	0300500477	550x410x400mm	9" / 220mm	145W/0.2 hp	220 V/ 50 Hz
Topaz 250	0300500478	515x410x455mm	10" / 250mm	145W/0.2 hp	220 V/ 50 Hz
Topaz 275	0300500479	525x410x455mm	11" / 275mm	145W/0.2 hp	220 V/ 50 Hz

Meat Slicer (PALLADIO AUTOMATIC SLICER)

SIRMAN

- Ergomic controls - push buttons with IP67

PROTECTION RATING.

- 3 speed selection.
- 3 different adjustments for carriage travel.
- Slice counter.
- Slice number setting with automatic stop

FEATURE.

- Enclosed and sealed drive motor.
- Positive drive belt.
- Carriage release system for manual slicing.
- Output slices per minute: 37 - 70.
- More space between blade & body machine.
- Large Tray
- Palladio Auto Control
- Welded and rounded stainless steel automatism

STRUCTURE.

- Piston/rod system carriage motion
- Fan-cooled carriage motion motor with

COMMERCIAL-GRADE OIL BATH REDUCTION

- Blade and carriage motion powered by separate controls
- An easily accessible switch arm can convert the unit from automatic to manual operation
- The exclusive designed carriage "Nettuno" is available with a special end weight and an adjustable vertical product fence to provide stability and advance products evenly.
- Two control systems:
- Standard on/off
- Variable speed available (VV versions).
- Output slicer per minute:
- Palladio Automec: 37
- Palladio Automec VV: 40 - 50



Pallidio
300 Automec
Code: 0300500480

Pallidio
300 VV Automec
Code: 0300500481

Blade Dia(mm)	Power	Voltage	Product Size
12" / 300	275W/0.37hp & 180W/0.24hp	220V/ 50Hz	710x547x545mm

Semi-Automatic Meat Slicer

PRIMO

- CE, ROHS, LFGB, ETL, NSF, FDA
- Anodized aluminium upper body & optional for base
- Stainless steel blade
- Equipped with Sharpener
- Can be used to cut cold meat, ham, fish, cheese, etc



8'
Code: 0300500303



10'
Code: 0300500307



12'
Code: 0300500309

Code	Product Size	Blade Dia	Cutting thickness	Power	Input Voltage	NW	GW
0300500303	430x380x350mm	220mm(8")	0~12mm	280w	220~240V/50HZ	14kg	16kg
0300500307	480x370x360mm	250mm(10")	0~12mm	320w	220~240V/50HZ	15.5kg	17.5kg
0300500309	530x460x460mm	300mm(12")	0~15mm	420w	220~240V/50HZ	24.5kg	27.5kg

NTSmart Tel.+86-20-89301818/28/38 CHINA nts@ntsmart.com
NTSmart Tel.+95-1-7534400 MYANMAR nts@ntsmyanmar.com.mm
NTSmart Tel.+66-2-8667474 THAILAND sales@ntsmart.co.th
NTSmart Tel.+255-22-2700674/75 TANZANIA ntstz@ntsmart.com

CE, ROHS, LFGB, ETL, NSF, FDA

- Anodized aluminium upper body & optional for base
- Stainless steel blade
- Equipped with Sharpener
- Can be used to cut cold meat, ham, fish, cheese, etc.

PRIMO

12' Semi-Automatic Meat Slicer



Code: 0300500311

12' Automatic Meat Slicer

- Anodized aluminum upper body and stainless steel base



Slicing speed:
37times/minute
Code: 0300500580

14' Automatic Meat Slicer

- Anodized aluminum upper body and stainless steel base



Slicing speed range:
42-56 times/minute
Code: 0300500316

Code	Product Size	Blade Dia	Cutting Thickness	Power	Input Voltage	NW	GW
0300500311	640x600x650mm	300mm(12")	0~15mm	450w	220~240V/50Hz	41kg	45kg
0300500580	650x600x750mm	300mm(12")	0~15mm	550w	220~240V/50Hz	68kg	88kg
0300500316	1030x740x1460mm	350mm(14")	0~18mm	750wx2	220~240V/50Hz or 380V/50Hz	228kg	265kg

Meat Grinder

RoHS CE RoHS AutoQuotes SIRMAN

- Polished die-cast aluminum construction.
- Ventilated motor.
- Oil bath gearbox meat grinder.
- Mouth and propeller mincer in untreated cast iron for food, on request in AISI 304 stainless steel
- S7steel plate and knife.

CE version with:

- IP54 protection rated controls and NVR device.

Optionals:

- Reverse.



TC12E
Code: 0300500485

TC22E
Code: 0300500486

Sirman Code	Code	Product Size	Power	Production Capacity	Equipped with 1 blade
TC12E	0300500485	395x360x415mm	735 W/ 1 hp	25 kg/ 10 mins	Φ 4.5 mm hole
TC22E	0300500486	395x360x415mm	800 W/ 1.2 hp	33 kg/ 10 mins	Φ 4.5 mm hole

Meat Grinder

- Sturdy anodized aluminum frame.
- Ventilated motor.
- Hermetic meat grinder gearbox with oil bath gears.
- hardened and ground helical gears.
- TC 12 Denver:mouth and propeller
  Optional stainless meat grinder.
- Mouth and meat grinder alloy blade of alums
- S7steel plate and knife.
- Compartment for knife and plate.
- Reverse shuttle fitted as standard.

CE version with:

- IP54 protection rated controls and NVR device.



TC 8 Vegas
Code: 0300500487



TC 12 Denver
Code: 0300500488

Sirman Code	Code	Product Size	Power	Production Capacity	Equipped with 1 blade
TC 8 Vegas	0300500487	335x300x360mm	250 W/ 0.34 hp	70 kg/ hr	Φ 6 mm hole
TC 12 Denver	0300500488	377x366x375mm	550W/ 0.75 hp	85 kg/ hr	Φ 6 mm hole

Meat Grinder

- CE, LFGB Certificate
- Equip with circuit breaker
- Full stainless steel body, #304 stainless steel grinder head and auger
- Quick heat dissipation
- long life span, easy to use, safe & durable high reliability
- Silent and high efficiency



8#
Code: 0300500302



12#
Code: 0300500329



22#
Code: 0300500126

Code	Product Size	Power	Power	Production Capacity	NW	GW
0300500302	460x230x370mm	300w	220~240V/50Hz	80kg/h	14kg	16kg
0300500329	400x240x500mm	550w	220~240V/50Hz	120kg/h	26kg	28kg
0300500126	420x270x520mm	900w	220~240V/50Hz	220kg/h	33kg	35kg

NTSmart Tel.+86-20-89301818/28/38 CHINA nts@ntsmart.com
NTSmart Tel.+95-1-7534400 MYANMAR nts@ntsmyanmar.com.mm
NTSmart Tel.+66-2-8667474 THAILAND sales@ntsmart.co.th
NTSmart Tel.+255-22-2700674/75 TANZANIA ntstz@ntsmart.com

Table Top Fresh Meat Grinder

PRIMO

- Good looking and compact design
- All stainless steel AISI 304
- Meat is cutted rather than squashed, therefore meat will be more fresher with less discoloration
- Seamless joins from feeder tray down to the worm drive is made of high quality stainless steel
- Stainless steel mincing head unique designed for high yeld production
- Disassemble easy and fast for cleaning
- Fan-cooled motors for continuous use.
- Motor-reducer equipped with a double seal for long trouble-free service.
- Can be used by butchers, delicatessens, supermarkets canteens and any type of food retailer



12#
Code: 0300500423

22#
Code: 0300500424



32#
Code: 0300500427

Code	Dimension(mm)	Power	Voltage	Plate	Capacity	NW	Packing Size(mm)
0300500423	429x382x405	550w	220-240v/50hz	3/4.5/6/8	150kg/h	26kg	485x425x445
0300500424	479x420x416	750w/1100w	220-240v/380v/50hz	3/4.5/6/8/10	300kg/h	33kg	545x445x455
0300500427	556x520x636	1500w	380v/50hz	3/5/9/15	800kg/h	70kg	625x560x670

Table-Top Fresh Meat Slicer

- Technique of Germany
- Good looking and compact design
- All stainless steel AISI 304
- Surface processing is the metal wiredrawing.



Code: 0300500430

Freestanding Fresh Meat Slicer

- Seamless joins from feeder tray down to the worm drive is made of high quality stainless steel
- The seperate knife set for easy and fast cleaning. high-tensile nylon wheel for noise reduction



Code: 0300500431

Code: 0300500432

Code	Dimension(mm)	Power	Voltage	Thickness	Capacity	NW	Packing Size(mm)
0300500430	320x470x490	550w	220v/50hz	3.5mm	250kg/h	40kg	400x550x610
0300500431	500x362x850	550w	220v-240v/50hz	3.5mm	500kg/h	56kg	570x430x950
0300500432	500x412x850	750w	220v-240v/50hz	3.5mm	800kg/h	77kg	570x480x950

Electric Meat Tenderizer/Stripper

PRIMO

- Robust and full stainless steel model, no sharp corner
- Meet the hygiene and all safety regulations
- Simple and easy operation and cleaning
- Tenderizer/ meat stripper optional



Code: 0300500237

Product Size(mm)	Power(W)	Voltage	Capacity	NW	GW
560x305x560	350	220V/50Hz or 110V/60Hz	200kg/h	14.3kg	15.7kg

- Robust and full stainless steel mode
- Meet the hygiene and all safety regulations
- Simple and easy operation and cleaning
- Tenderizer/ meat stripper optional

Meat Stripper Attachment A



Code: 0300500489

Size: 240x130x120mm

Tenderizer Attachment B



Code: 0300500490

Size: 240x130x120mm

Tenderizer Attachment C



Code: 0300500491

Size: 240x130x120mm

- Feeder handle interlock- prevents grater from operating unless the handle is down
- Hopper hand guard grid- for operator safety and injury prevention
- Direct gear driven motor

Single Head Cheese Grater



Code: 0300500198

Double Heads Cheese Grater & Meat Mincer Machine



Code: 0300500199

Code	Dimension(mm)	Power	Voltage	Grater Capacity	Grater opening size	NW
0300500198	490x325x485	500W	220V/50Hz	40kg/h	150x95mm	16kg
0300500199	680x335x580	900W	220V/50Hz	Cheese: 60kg/h , Meat:180kg/h	150x95mm	27kg

NTSmart Tel.+86-20-89301818/28/38 CHINA nts@ntsmart.com
NTSmart Tel.+95-1-7534400 MYANMAR nts@ntsmyanmar.com.mm
NTSmart Tel.+66-2-8667474 THAILAND sales@ntsmart.co.th
NTSmart Tel.+255-22-2700674/75 TANZANIA ntstz@ntsmart.com

Bone Saw Machine
(SO ALLUMINIO Series)

SIRMAN

- Simple and sturdy machines that are safe and easy to use.
- Stand-alone structure made out of cast anodized aluminium, shiny, hygienic and rustproof.
- Features a counter, meat pusher and serving slicer in stainless steel AISI 304.
- 24V controls with safety micro-switch on door, redundant ECU and motor brake (EC).
- Ease and precision in both horizontal and vertical adjustment of the upper pulley.
- Maximum blade adhesion to the pulley, thanks to the semi-curved shape of the pulleys and ideal adjustment.
- Sealed bearings on upper pulley.
- Smooth cleaning thanks to 2 special manufacturing details:
- All the electrical parts are protected IP x5 or higher.
- By simply unscrewing two knobs, you can remove the blade, upper pulley and its support, thereby making for a surface void of any encumbrance.
- Powerful asynchronous and ventilated 4-pole motors protected by sealing oil sump.
- Equipped with 16 mm tempered blades for cutting bones, frozen foods and fresh foods.



SO 1550 F3
Code: 0300500482

SO 1650 F3
Code: 0300500483

SO 1840 F3
Code: 0300500484

Sirman Code	Code	Product Size	Blade Length	Power	R.p.m.
SO 1550 F3	0300500482	510x560x778mm	1550mm	1.5hp	1400
SO 1650 F3	0300500483	600x530x915mm	1650mm	1.5hp	1400
SO 1840 F3	0300500484	600x530x915mm	1840mm	1.5hp	1400

Bone Saw Machine

PRIMO

- The body is made of aluminum alloy, the working table is made of No.304 S/S.
- Driving mechanism design,durable and not easy to wear out
- Built-in protector, waterproof and secure,when open the body, machine stop at once.
- The working area is large, easy to adjust.
- Low noise,easy to install and disassemble
- Can be used to cut frozen meat, fish and bone, etc
- Voltage:110V/60HZ or 220-240v/50HZ,
- Rotaional speed:1420 times/mins



Code: 0300500318



Code: 0300500319

Code	Power	Blade size	Cutting thickness	Cutting height	Size of work bench	Product size	GW
0300500318	650w	1650x16x0.5mm	5-155mm	0-180mm	500x380mm	52x47x82cm	46kg
0300500319	1100w	2000x20x0.5mm	5-180mm	0-260mm	560x425mm	59x57x104cm	76kg

Vacuum Packing Machine
(EASYVAC Series)

SIRMAN

- Compact and fast machine, dedicated to small portions, ideal combination with cooking tools low temperature type Softcooker.
- Easy setting of vacuum time and welding.
- easily removable sealing bar.
- Busch vacuum pump.
- Display percentage vacuum and remaining time.
- Storing last setting.
- Total cycle counter use.
- Preheat cycle pump and cleaning oil
- oil change message.
- External vacuum time.
- Manual lid lifting



Easyvac 25 BX
Code: 0300500492

Sirman Code	Dimension	Vacuum chamber size	Power(kW)	Sealing bar size	NW
Easyvac 25 BX	685x405x708mm	270x350 h.75mm	0.1	260mm	30kg

Vacuum Packing Machine

SIRMAN

- Extraordinary design reduces the footprint of the machine and improves comfort
- Bell in great development of volume plexiglass thermoformed thick on mod. 50 and 70, injection on mod. 30 and 40
- easily removable sealing bar
- Extremely easy to clean
- Automatic lifting the lid
- Electronic control system with proximity sensor



W8 30 Easy BX
Code: 0300500493

W8 40 Easy BX
Code: 0300500494

Sirman Code	Code	Dimension	Vacuum chamber size	Power(kW)	Sealing bar size	NW
W8 30 Easy BX	0300500493	402x525x408mm	340x360 h.160mm	0.35	310mm	38kg
W8 40 Easy BX	0300500494	493x585x422mm	430x410 h.170mm	0.75	410mm	56kg

Vacuum Packing Bag

SIRMAN

- TEMPERATURE RANGE: -40°C / +120°C



3302BVCC15X20
Code: 0300500468
Size: 150x200mm

3302BVCC20X30
Code: 0300500469
Size: 200x300mm

3302BVCC25X35
Code: 0300500470
Size: 250x350mm

3302BVCC30X40
Code: 0300500471
Size: 300x400mm

NTSmart CHINA Tel.+86-20-89301818/28/38 nts@ntsmart.com
NTSmart MYANMAR Tel.+95-1-7534400 nts@ntsmyanmar.com.mm
NTSmart THAILAND Tel.+66-2-8667474 sales@ntsmart.co.th
NTSmart TANZANIA Tel.+255-22-2700674/75 ntstz@ntsmart.com

Single Room Vacuum Packing Machine

- This machine has advanced design, complete functions, stable and reliable performance, wide range of application, good sealing strength, easy maintenance and other features

Free Standing Design



Code: 0300500495

Table-top Design



Code: 0301100074

Free Standing Design



Code: 0301100075

Code	Product size(mm)	Vacuum chamber size	Vacuum power	Pumping rate	NW
0300500495	650x580x1000	600x460x170mm	0.9KW	5.5L/s	115kg
0301100074	480x330x360	380x280x70mm	0.37KW	2.8L/s	35kg
0301100075	520x480x990	400x370x90mm	0.9KW	5.5L/s	88kg

Vacuum Packing Bag

Code: 0301100076
Size : 160x240mm
N.W. : 130pcs/kg

Code: 0301100077
Size : 180x260mm
N.W. : 110pcs/kg

Code: 0301100078
Size : 200x300mm
N.W. : 68pcs/kg

Code: 0301100079
Size : 250x350mm
N.W. : 50pcs/kg

Code: 0301100080
Size : 300x400mm
N.W. : 35pcs/kg



Softcooker (SOUS VIDE COOKING MACHINE)

PRIMO

- Drainage values with safety locker
- Digital control
- Water Circulation system to insure the water temperature be same
- Stainless steel 304 shelf for separate the packing foods
- Seamless stretching water tank
- Silicone seal cover
- Material: 201 Stainless steel ,with 0.8mm thickness

Code: 0300500581

Code: 0300500582



Code	Dimension(mm)	Power	Capacity	GN Pan Size(mm)
0300500581	360x450x315	500W	16L	2/3 GN Pan-200
0300500582	360x625x315	700W	24L	1/1 GN Pan-200

Softcooker
(SOUS VIDE COOKING MACHINE)

- ow temperature cooking device with water static heatir
- Stainless steel structure
- Ptactical handles to carry it easily
- Powerful shock-proof coated heating elements in contact with tank bottom
- 5 storable programs
- Electronic control system of the temperature with working temperature display
- Temperature setting in °C and °F.
- Equipped with lid
- Rversione with tap for discharging water



Softcooker S
R 2/3 GN
Code: 0300500499



Softcooker
SR 1/1 GN
Code: 0300500500



Softcooker
SR 2/1 GN
Code: 0300500502

Sirman Code	Code	Dimension(mm)	Capacity	Power(W)	Temperature	NW
Softcooker SR 2/3GN	0300500499	400x370x300	19 L	1150	24/99°C	5.5kg
Softcooker SR 1/1GN	0300500500	575x370x300	29 L	1700	24/99°C	16.5kg
Softcooker SR 2/1GN	0300500502	750x650x400	57.5 L, 2/1 GN	2000	24/99°C	16kg

Softcooker
(SOUS VIDE COOKING MACHINE)

- High precision warmer with temperature control.
- Working temperature display.
- 5 storable programs.
- IP X3 protection rated stainless steel structure.
- Can be applied to the pot by means of a clamp. (max depth 16,5 cm)
- Best performances up to 80 lt.
- Protection device switches off the warmer in case of accidental use outside the liquid.
- Circulating pump to help the best product mixing.
- Temperature sensor to prevent overload and overheating.

Morsetto per fissaggio pentola
Pot fixing clamp



Softcooker
Y09 1/1 GN
Code: 0300500501

Sirman Code	Code	Dimension(mm)	Capacity	Power(W)	Temperature	NW
Softcooker Y09 1/1GN	0300500501	720x500x350	27 L, 1/1 GN	2000	24/99°C	11.5kg

NTSmart Tel.+86-20-89301818/28/38 CHINA nts@ntsmart.com
NTSmart Tel.+95-1-7534400 MYANMAR nts@ntsmyanmar.com.mm
NTSmart Tel.+66-2-8667474 THAILAND sales@ntsmart.co.th
NTSmart Tel.+255-22-2700674/75 TANZANIA ntstz@ntsmart.com

Hand Mixer (STORM Series)

- Highly effective cooling system.
- Sturdy, lightweight ABS frame Glass Filled
- Practical and ergonomic handle
- The machine is protected with IPX3
- Quick coupling system
- Three steel knife blades cutlery



STORM VV
Code: 0300500503

Sirman Code	Dimension(mm)	Power	R.p.m	NW	Std Accessories
STORM VV	74x145xH290	200 W/ 0.27 hp	2000 ~ 12500	1.1 kg	Shaft

Hand Mixer (CICLONE Series)

- Efficient motor cooling system
- Sturdy, lightweight ABS frame Glass Filled
- Practical and ergonomic handle
- Available with fixed or variable speed
- safety system against accidental activation
- of Trigger switch
- Available in 3 different engines
- The machine is protected with IPX3
- Quick coupling system
- Shafts available in 25 and 35 cm
- Three steel knife blades cutlery
- Optional: Pot support, wall attachment , whisk.
- Whisk with metal gearing
- Whips Demountable and in the dishwasher



Ciclone 20 VV
Code: 0300500504

Ciclone 28 VV
Code: 0300500505

Ciclone 36 VV
Code: 0300500506

Sirman Code	Code	Dimension(mm)	Power	Whisk	Shaft	NW
Ciclone 20 VV	0300500504	100x182xH340	200 W/ 0.27 hp	1900 ~ 2700	1000 ~ 12000	2kg
Ciclone 28 VV	0300500505	100x182xH340	280 W/ 0.38 hp	1900 ~ 2700	1000 ~ 12000	2.2kg
Ciclone 36 VV	0300500506	100x182xH340	360 W/ 0.5 hp	1900 ~ 2700	1000 ~ 12000	2.5kg

Shaft



Asta 25
Code: 0300500507



Asta 35
Code: 0300500508

Whisk



Frusta
Code: 0300500515

Sirman Code	Code	Dimension(mm)	NW
Asta 25	0300500507	Φ 94x250	0.5kg
Asta 35	0300500508	Φ 94x320	1.0kg
Frusta	0300500515	Φ 106x113x348	2.0kg

Hand Mixer (VORTEX Series)

- Efficient engine cooling system.
- Sturdy, lightweight ABS frame Glass Filled.
- Practical and ergonomic handle.
- Rubber bumpers to cushion contact with the containers.
- Powerful performance engines.
- Available in three versions of commands:
- Fixed speed.
- Variable speed on his finger.
- Variotronic: speed control with stabilizer.
- Safety system against accidental ignition.
- The Trigger switch.
- Available in 3 different engines.
- The machine is protected with IPX3.
- Quick coupling system.
- Totally removable rods for a thorough cleaning which extends their life.
- Hub and completely in stainless steel bell.
- Whisk with metal gearing.
- Whips Demountable and in the dishwasher



Vortex 43 VV
Code: 0300500510

Vortex 55 VV
Code: 0300500511

Vortex 75 VV
Code: 0300500512

Sirman Code	Code	Dimension	Power	Voltage	Whisk	Shaft
Vortex 43 VV	0300500510	125x190xH377mm	430W/ 0.6 hp	1 Ph	2000rpm	13000rpm
Vortex 55 VV	0300500511	125x190xH385mm	550 W/ 0.8 hp	1 Ph	2075rpm	13500rpm
Vortex 75 VV	0300500512	125x190xH390mm	7500 W/ 0.8 hp	1 Ph	2150rpm	14000rpm

Shaft





Asta 35
Code: 0300500513

Asta 45
Code: 0300500514

Whisk



Frusta
Code: 0300500509

Sirman Code	Code	Dimension	NW
Asta 35	0300500513	Φ 100x415mm	1.2kg
Asta 45	0300500514	Φ 100x515mm	1.6kg
Frusta	0300500509	Φ 117x113x385mm	1.2kg

NTSmart Tel.+86-20-89301818/28/38 CHINA nts@ntsmart.com
NTSmart Tel.+95-1-7534400 MYANMAR nts@ntsmyanmar.com.mm
NTSmart Tel.+66-2-8667474 THAILAND sales@ntsmart.co.th
NTSmart Tel.+255-22-2700674/75 TANZANIA ntstz@ntsmart.com

Immersion Blender(Variable Speed)

PRIMO

- Professional equipment particularly suited for ice cream shops, confectionery, restaurants and hotels etc.
- Elegant body design made from plastic, heavy duty hand mixer available in 4 motor sizes to meet the demands of any kitchens
- 500W and 750W ventilated motor, thermal overload protection and variable speed control switch
- Ergonomic handle for comfortable use
- Fully detachable stainless steel tubes available in 9 lengths, 160mm, 200mm, 250mm, 300mm, 350mm, 400mm, 450mm, 500mm and 550mm, 185mm and 250mm whisk.
- Full stainless steel, high performance blade, all food contact parts in stainless steel



Code: 0300500623



Code: 0300500624

Code	Dimension	Voltage	Power	Speed	NW
0300500623	169x91x359mm	220V/50HZ	500W	4000 - 16000rpm	1.95KGS
0300500624	176x112x425mm	220V/50HZ	750W	8000 - 20000rpm	2.8KGS

Blender Tube

PRIMO



250MM
Code: 0300500625
NW: 0.84KGS

300MM
Code: 0300500626
NW: 1KGS

350MM
Code: 0300500627
NW: 1.16KGS

400MM
Code: 0300500628
NW: 1.33KGS

450MM
Code: 0300500629
NW: 1.48KGS

500MM
Code: 0300500630
NW: 1.63KGS

550MM
Code: 0300500631
NW: 1.78KGS

Whisk



Code: 0300500632
Size: 250MM
NW: 0.9KGS

Wall Hanger for Immersion Blender



Code: 0300500633
G.W.: 2.85KG

Support Bracket for Immersion Blender



Code: 0300500634
G.W.: 8.9KG

Cutting Machine

- With high speed motor. Cutting meat, vegetable, peanut, crude drug, etc.
- Rotational blade
- High quality stainless steel blade
- Safe lock catch, Protective function
- Removable S.S bowl
- Equip with safety system (magnetic switch on only when the bowl is attached to the machine)
- Safety function – the machine will automatically stop when the bowl is removed
- Material:Stainless steel 304 (body) 420(blade)



Code: 0300500398



Code: 0300500403



Code: 0300500399

Code	Dimension	Voltage	Power	Capacity	Rotation	NW
0300500398	355x310x510mm	220V 50-60HZ	370w	4L	1400 rpm/ min	13kg
0300500403	425x365x560mm	220V 50-60HZ	550w	6L	1400 rpm/ min	22kg
0300500399	435x410x585mm	220V 50-60HZ	1100w	10L	1400 rpm/ min	31kg

Cutting Machine

- 304 stainless steel materials
- long life span, easy to use, safe & durable high reliability
- Silent and high efficiency
- Easy Operation.





Code: 0300500516





Code: 0300500175





Code: 0300500517

Code	Power	Voltage	Capacity	NW	GW	Packing Dimension
0300500516	950w	230V/50HZ	6L	18.86kg	20.36kg	565x365x440mm
0300500175	950w	230V/50HZ	9L	19.92kg	21.26kg	570x385x460mm
0300500517	1200w	230V/50HZ	12L	21.70kg	23.50kg	575x385x525mm

NTSmart Tel.+86-20-89301818/28/38 CHINA nts@ntsmart.com
NTSmart Tel.+95-1-7534400 MYANMAR nts@ntsmyanmar.com.mm
NTSmart Tel.+66-2-8667474 THAILAND sales@ntsmart.co.th
NTSmart Tel.+255-22-2700674/75 TANZANIA ntstz@ntsmart.com

Double Speeds Bowl Cutter

PRIMO

- Full stainless stee, base is 201SS, cutting bowl is 304SS.
- Strong cutlery steel knife
- Powerful and ventilated motor
- Safety microswitch included
- Transparent lid with opening to add ingredients during operation
- Scraper accessory ensures a perfect result
- Two speeds control and pulse function
- The machine is designed and produced according to international standards for safety and hygiene.
- Includes Smooth S blade



5L
Code: 0300500635

8L
Code: 0300500636

12L
Code: 0300500637

18L
Code: 0300500638

Code	Product Size	Capacity	Power	Speed	Voltage	N.W./G.W
0300500635	340x275x524mm	5L	800W	LO.:1500rpm / HI.:2800rpm	220V-240V/50/60Hz	22.5/25.5kg
0300500636	340x275x588mm	8L	800W	LO.:1500rpm / HI.:2800rpm	220V-240V/50/60Hz	23/26kg
0300500637	390x312x623mm	12L	1500W	LO.:1500rpm / HI.:2800rpm	220V-240V/50/60Hz	24/27kg
0300500638	390x312x713mm	18L	1500W	LO.:1500rpm / HI.:2800rpm	220V-240V/50/60Hz	24.5/27.5kg

Vegetable Cutter Machine

PRIMO

- Exclusive patent design
- Direct drive motor at the single speed of 1500 rpm
- Detachable discs
- Interlocked apparatus included for safety use
- Kidney shape and round shape inlet for your choice
- Compact design and heavy duty
- Attention: the cutting blade is optional
- Grater discs: 3mm, 7mm
- Slicer discs: 2mm, 4mm
- Attachment: 4 pcs blades

Compact Vegetable Cutter



Code: 0300500583

2-in-1
Bowl Cutter and
Vegetable Cutter



Code: 0300500645

3L Cutting Bowl
Code: 0300500653

5L Cutting Bowl
Code: 0300500654

Code	Size(mm)	Motor	Voltage	Speed	Bowl capacity	N.W./G.W.
0300500583	464x382x626	400W	220V/50Hz	1500RPM		13.3/16.5kg
0300500645	465x382x626	600W	220V/50Hz	1500RPM	3L/5L	17.2/20.5

BLADES OF VEGETABLE CUTTER

COMPACT SERIES

Standard Attachment

For Grater / Shredder(3mm)



For Grater / Shredder(7mm)



For slicer(2mm)



For slicer(4mm)



Optional

For Grater / Shredder(5mm)



For slicer(1mm)



Julienne Disc 2x2mm



Julienne Disc 4x4mm



Disc Holder



NTSmart Tel.+86-20-89301818/28/38 CHINA nts@ntsmart.com
NTSmart Tel.+95-1-7534400 MYANMAR nts@ntsmyanmar.com.mm
NTSmart Tel.+66-2-8667474 THAILAND sales@ntsmart.co.th
NTSmart Tel.+255-22-2700674/75 TANZANIA ntstz@ntsmart.com

Vegetable Cutter Machine

PRIMO

- Versatile and efficient: you can quickly process food to achieve different results with an excellent finish Utmost hygiene.
- the components are manufactured from materials suitable for food handling and can be easily removed for fast cleaning.
- Ventilated motor: powerful and low-noise can perform all processes effortlessly
- Controls with low-voltage (24V) switch.
- Machines conforming to CE hygiene and safety standards
- Discs and blades for all kinds of processing.
- Attachment:5 pcs blades(Grater discs:3mm, 4.5mm, 7mm, Slicer discs: 2mm, 4mm)



Code: 0300500221



Code: 0300500222

Code	Dimension	Motor	Voltage	N.W./G.W.
0300500221	655x315x535mm	550W	220V/50Hz or 110V/60Hz	24.5/28 kg
0300500222	655x325x535mm	750W	220V/50Hz or 110V/60Hz	26/30 kg

BLADES OF VEGETABLE CUTTER

Standard Attachment

For slicer 3 Blades / 2mm



For slicer 2 Blades / 4mm



For Grater / Shredder
Hole: 3mm



For Grater / Shredder
Hole: 4.5mm



For Grater / Shredder
Hole: 7mm



Optional

For Grater / Shredder
Holes:2mm



For Grater / Shredder
Holes:10mm





For Fine Grater







For Julienne
3x3 mm



For Julienne
4x4 mm

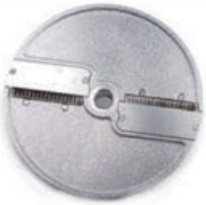

Disc Holder



For Slicer 1mm
3 Blades



For Slicer 2mm
3 Blades



For Slicer 4mm
2 Blades



For Slicer 2/4/10mm



For Slicer 14mm
Single Blades



For Slicer 6mm
2 Blades



For Slicer 8mm
Single Blade



For Slicer 10mm
Single Blade





COMBINED BLADES OF VEGETABLE CUTTER

For French Fries
8x8 mm



For French Fries
10x10 mm





For French Fries
8x8 mm



For French Fries
10x10 mm



For Dicing
8x8x8 mm



For Dicing
14x14x14 mm



For Dicing
20x20x14 mm



For Dicing
10x10x10 mm



For Dicing
8x8x8 mm



For Dicing
10x10x10 mm

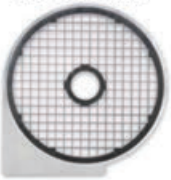

For Dicing
14x14x14 mm

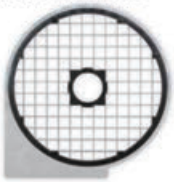

NTSmart Tel.+86-20-89301818/28/38 CHINA nts@ntsmart.com
NTSmart Tel.+95-1-7534400 MYANMAR nts@ntsmyanmar.com.mm
NTSmart Tel.+66-2-8667474 THAILAND sales@ntsmart.co.th
NTSmart Tel.+255-22-2700674/75 TANZANIA ntstz@ntsmart.com

Cutting Robot

DREMAX®

- Cutting options Strips, slice & rectangle cutting.
- Up to 10 cm in length
- Recommended for larger processing amount
- Clearly cut along with the fibers of foodstuff
- Sutiables for cutting vegetable
- **Std. Accessories:**

1. Julienne board : 3x3 mm

- **Optional Accessories:**

1. Slice board: 0.3 - 2.5 mm
2. Slice board: 3mm, 4 mm
3. Shuttle board: 1.0x1.0 mm, 1.2x1.2 mm , 1.5x1.5 mm, 2.0x2.0 mm, 2.5x2.5 mm, 3.0x3.0 mm, 4.0x4.0 mm
4. Cutting thickness: up to 4 mm



DM-91D
Code: 0300500549

Dremax Code	Dimension	Insertiong Slot	Power	Operation time	
DM-91D	470x280x430mm	100x100x120mm	200w	30 mins	
Processing capacity	**Cut Japanese Raddish**	**Cut carrot**	**Cut burdock**	**Voltage**	**NW**
using 3 x 3 mm julienne board	10 pcs/ 5 mins	70 pcs/ 5 mins	90 pcs/ 5 mins	220V/60hz	13kg

Multi Slicer

DREMAX®

- Round blade super fast planetary rotation (2150 revolutions per minute), amazing speed processing
- Best result of cabbage and lettuce cutting
- Heavy duty usage
- Easy cleaning with simple structure, easy maintenance
- Low cost production and reduction in size and weight
- Waterproof and dustproof
- Speed up blade rotation with simple structure
- Suitable for:

1. Cutting Vegetable
2. Cutting fruit



DX-100
Code: 0300500550

Dremax Code	Power(W	Dimension	Operation time
DX-100	180	340x430x510mm	30 mins
Inserting Slot		**Voltage**	**Adiustment thickness**
Φ 70, Φ 200mm(deformed semicircular)		220V/60 Hz	0.3 to 5.0 mm

Vertical Cutter (Fine)

DREMAX®

- Options:

1) 2 kinds of roughness control boards.
2) 2 types of roughness can be chosen, rough (5 holes) with about 4 to 6 mm, fine (3 holes) with about 2 to 4 mm.

- By throwing it twice, you can make it finer.



DX-40
Code: 0300500551

Dremax Code	Dimension	Inserting Slot	Power(W)
DX-40	200x260x410mm	Φ110mm	110
NW	**Operation time**	**Processing power**	
5kg	20 mins	Cabbage 10 balls/ 5 mins,Onion 90 balls/ 5 mins	

Multi Slicer Mini (Trumpet Inlet)

DREMAX®

- Round blade super high speed planetary rotation (6000 r.p.m. per minute)
- Compact design, clean, easy to clean
- Trumpet insertion type perfect for different kinds of spring onions
- Bring with the root of a all-purpose onion



DX-50B
Code: 0300500552

Dremax Code	Dimension	Inserting Slot	Power(W)	Voltage
DX-50B	220x330x370mm	Φ85 to Φ45mm(trumpet type)	110	220V/ 60 Hz
NW	**Operation time**	**Processing power**		**Adjustment thickness**
5 kg	20 mins	All-purpose spring onion 30 bunches / 5 minutes		0.3 to 5 mm (stepless)

Multipurpose Food Cutter

DREMAX®

- Compact dish type machine cutter
- Easy to handle with plastic ball



DX-90
Code: 0300500553

Dremax Code	Dimension	Power(W)	Thickness
DX-90	580x390x240mm	180	Approximately 3 mm standard
Voltage	**Operation time**	**Ball capacity**	
220V/ 60 Hz	60 mins	4L (ball dia: 370 mm)/ * ball onion 1 time Input amount: 2 - 3 kg	
Processing power		**NW**	
Cabbage 15 balls / 5 minutes , onion 180 balls / 5 minutes		15kg	

NTSmart Tel.+86-20-89301818/28/38 CHINA nts@ntsmart.com
NTSmart Tel.+95-1-7534400 MYANMAR nts@ntsmyanmar.com.mm
NTSmart Tel.+66-2-8667474 THAILAND sales@ntsmart.co.th
NTSmart Tel.+255-22-2700674/75 TANZANIA ntstz@ntsmart.com

Mandolin

DREMAX®

- Sliced and shredded
- Easy to clean



S19D
Code: 0300500554

Dremax Code	Product Dimension	Inserating slot	NW
S19D	430x170x210mm	98x98x75mm	2kg
Shred size	**Processing power**	**Thickness Adj**	
3x3 mm only	onion 180 balls / 5 minutes	1 to 10 mm (1 mm increments) Dial type	

Bowl Cutter

PRIMO

- Anodized aluminum alloy body, "S" shape stainless steel blade and stainless steel food tray.
- Can chop meat, vegetables, ect



Code: 0300500395

Power	Blade rotational speed	Plate rotational speed	NW	GW
400w	1460r/min	20r/min	36kg	52kg
Diameter of the plate	**Processing dimension (WxT)**	**Product Dimension**	**Voltage**	
Φ400mm	40mmx30mm	670x480x410mm	220V~240/50Hz,110V/60Hz	

Potato Peeler

PRIMO



Code: 0300500522

Code: 0300500094



Code: 0300500523

Code	Product Dimension	Power	Voltage	Capacity	Timer	Bowl Capacity	NW	GW
0300500522	476x646x1243mm	750w	230V/50HZ	165 Kg/ hr	0-5min	20.6L	58.4kg	76.4kg
0300500094	536x676x1273mm	950w	230V/50HZ	190 Kg/ hr	0-5min	27L	65kg	85.2kg
0300500523	586x986x943mm	1500w	230V/50HZ	260 Kg/ hr	0-5min	45.5L	90.2kg	113.2kg

Potato Peeler

PRIMO

- High efficiency, each loaded potato peeling takes only 2-3 minutes
- Internationl hygiene and safety standards, easy to operate and clean
- Adjustable S/S feet can be fixed to the floor
- Microswitches built-in the lid and the outlet opening
- Precise mechanical timer.



Potato Peeling Disc



Filter



Micro Switch



Switches and Timer



5KG/12L
Code: 0300500639

10KG/22L
Code: 0300500640

18KG/28L
Code: 0300500641

Code	Voltage	Power	Capacity	Volume	Timer	Packing size
0300500639	230V/50Hz	550W	70-100kg/h	5KG/12L	0-5min	700x610x1000mm
0300500640	230V/50Hz	750W	130-200kg/h	10KG/22L	0-5min	700x610x1040mm
0300500641	230V/50Hz	1100W	240-360kg/h	18KG/28L	0-5min	700x610x1190mm

Manual Potato Chip Machine



Code: 0300500524



Code: 0300500405

Manual Potato Slicer



Code: 0300500526

Electronic Potato Slicer



Code: 0300500525

Code	Power	Voltage	Material	Product size	NW	GW
0300500405			Stainless steel	290x230x560mm	6kg	6.85kg
0300500524			Stainless steel	360x180x250mm	6kg	6.5kg
0300500526			Stainless steel	300x150x150mm	1.1kg	1.3kg
0300500525	10w	220V 50-60Hz	Stainless steel	480x200x170mm	5.2kg	5.5kg

NTSmart Tel.+86-20-89301818/28/38 CHINA nts@ntsmart.com | NTSmart Tel.+95-1-7534400 MYANMAR nts@ntsmyanmar.com.mm | NTSmart Tel.+66-2-8667474 THAILAND sales@ntsmart.co.th | NTSmart Tel.+255-22-2700674/75 TANZANIA ntstz@ntsmart.com

Garlic Ginger Onion Processors

• Application: for cutting the rootstock vegetable, melon and fruit, such as lemon, carambola, potato, celery cabbage and so on.



Code: 0300500406



Code: 0300500528

Code	Dimension(mm)	Cutting Size(mm)	Power	Production Capacity	Voltage	Width of Conveyor	NW
0300500406	450x430x560	1-10, adjustable	180w	30-100kgs/hr	220V	80mm	17kg
0300500528	350x330x500	Slice2-5mm ,Strip2-4mm	180w	30-100kgs/hr	220V		17kg

Soybean Milk Machine

Code: 0300500529



Dimension(mm)	Voltage	Output	Power	NW	GW
325x325x720	220V 50-60hz	25-30kg/h	750W	18kg	19kg

Noodle Making Machine

- CQC certificate
- Adjustable thickness of noodle
- Aluminum motor/ copper motor optional
- Main body material : stainless steel
- Changeable knife size
- Regualr knife: 2.0mm
- Knife options: 2, 3.5, 6, 8, 10, 12, 15, 20mm round knife choice: 1.5, 2.0, 2.5, 3.0mm



Code: 0300500530



Code: 0300500533



Code: 0300500534



Code: 0300500532

Code: 0300500531

Code	Dimension(mm)	Power	Output	Noodle thickness	Noodle roll width
0300500530	600x400x1250	1.5kw/220v	50-120kg/h	0.5-15mm	220mm
0300500531	1150x650x1350	1.5kw/380v	70-120kg/h	0.5-15mm	270mm
0300500533	700x480x1100	1.5kw/220v	50kg/h	0.5-5mm	210mm
0300500534	1000x700x1600	3kw/380v	125kg/h	0.5-6mm	280mm
0300500532	650x500x350	0.55kw/220v	30kg/h	0.5-5mm	200mm

Automatic Fruit Juice Extractor

- Material: aluminium magnesium alloy
- Centrifugal style



Code: 0300500535

Dimension(mm)	Speed	Voltage	Power(kW)	Water proof grade	NW
490x290x460	2800r/min	220V/50hz	0.75	IPX1	24kg

Automatic Orange Juice Extractor

- Material: Stinless steel + PC
- Fully automatic system. Easy to operate.
- Fast speed
- Durable
- All copper motor
- Food-grade plastic accessories



Code: 0300500537



Code: 0300500536

Code	Dimension(mm)	Voltage	Power	Output speed	NW	Fruit Size (dia)
0300500536	660x700x1720	220V 50Hz	370w	40pcs orange/min	95kg	40-80mm
0300500537	400x480x990	220V 50Hz	120w	20pcs orange/min	55kg	40-80mm

Semi-automatic Orange Juice Extractor

- Disassemable
- All copper motor
- Durable
- Food-grade plastic accessories
- Semi automatic machine need hand push feeding.



Code: 0300500538

Dimension(mm)	Voltage	Power	Output speed	NW	Fruit Size (dia)
400x300x770	220V 50Hz	120kw	20pcs orange/min	42kg	40-80mm

NTSmart Tel.+86-20-89301818/28/38 CHINA nts@ntsmart.com
NTSmart Tel.+95-1-7534400 MYANMAR nts@ntsmyanmar.com.mm
NTSmart Tel.+66-2-8667474 THAILAND sales@ntsmart.co.th
NTSmart Tel.+255-22-2700674/75 TANZANIA ntstz@ntsmart.com

Semi-automatic Fruit Juice Extractor

- Food-grade stainless steel material
- All copper motor with stable and reliable operation
- juice cup with strainer design,reduce the foams
- Stainless steel shredder disc
- Disassembly, washable cup



Code: 0300500539

Power	Voltage	Cup capacity	Motor speed	Knife net	Dia	Waste residue box capacity
1000w	220v/50hz	750ml	12000r/min/ 5 level speed	stainless steel	Φ83mm	1.5-2L

Manual Juice Extractor

- Lever type.
- Easy to operate.
- 304 stainless steel squeezer.
- Suitable for commercial/juice shop/bar/hotel/milk coffee shop etc...
- Watermelon/ orange / lemon / pomegranate / grapefruit applicable.
- Can not extract apple juice.



Code: 0300500542

Handle length	Main body height	Squeezer dia	Squeezer height
24.5cm	48.5cm	Φ12.5cm	16cm

Automatic Sugarcane Juice Extractor

- The transmission mechanism and the juicing parts are separated to avoid food contamination during processing.
- The parts in contact with the food are made of stainless steel, and the juice and dross is separated automatically.
- With 4 wheels for easy moving, With reversal function.
- 5 levels of gear change, 3 stainless steel rollers.



Table Top Style
Code: 0300500652



Free Standing style
Code: 0300500651

Code	Dimension(mm)	Roller size	Power	Voltage	Motor speed	Feed hole	NW	GW
0300500651	320x340x740	Φ76x100mm	750W	220v/50hz	25rpm	62mm	54kg	64kg
0300500652	430x390x520	Φ76x100mm	750W	220v/50hz	25rpm	62mm	52kg	62kg

Manual Hamburger Patty Press

- Beautiful design
- Anodized aluminum body and stainless steel patty bowl.
- Manual operation, easy to be used



Code: 0300500327 Code: 0300500328

Code	Product Size(mm)	Patty Dia(mm)	NW	GW	Packing Size(mm)
0300500327	230x165x280	Φ100	4.6kg	5kg	300x165x262
0300500328	250x170x280	Φ130	4.75kg	5.2kg	300x165x262

Vertical Sausage Stuffer

- The cylinder is made of S/S 304 firm and durable.
- Upgraded version, strong gear and double thick stuffing rack.
- Standard four PP Plastic Stuffing tubes.
- Optional: Stainless steel stuffing tubes.
- Manual operation, two speed level
- Made of stainless steel
- Can be used to make sausage in different size



Code: 0300500322 Code: 0300500323 Code: 0300500324 Code: 0300500325 Code: 0300500326

Code	Product Size(mm)	Capacity	NW	GW	Packing Size(mm)
0300500322	540x320x290	3L	13	14	580x340x310
0300500323	690x320x290	5L	14	15	700x340x310
0300500324	850x320x290	7L	16	17	860x340x310
0300500325	640x410x300	10L	20	21	650x430x330
0300500326	770x410x300	15L	22	23	780x430x330

Horizontal Sausage Stuffer

- Beautiful design
- Easy to be used, safe and durable
- Manual operation, two speed level
- Made of stainless steel
- Can be used to make sausage in different size



Code: 0300500391 Code: 0300500392 Code: 0300500393

Code	Capacity	NW	GW	Packing Dimension(mm)
0300500391	3L	13kg	14kg	580x340x310
0300500392	5L	14kg	15kg	700x340x310
0300500393	7L	16kg	17kg	850x340x310

NTSmart Tel.+86-20-89301818/28/38 CHINA nts@ntsmart.com
NTSmart Tel.+95-1-7534400 MYANMAR nts@ntsmyanmar.com.mm
NTSmart Tel.+66-2-8667474 THAILAND sales@ntsmart.co.th
NTSmart Tel.+255-22-2700674/75 TANZANIA ntstz@ntsmart.com

Single Tank Vegetable Washing Machine

• Save 70% water compare with hand wash, it is more than ten times efficiency



Code: 0300500543



Code: 0300500544

Code	Size(mm)	Water tank size	Power input	Power consumption	Capacity of sink
0300500543	850x700x960	760x520x350mm	750w/220v	0.75kw/hr	0.1m³
0300500544	1000x860x960	910x650x360mm	1300w/220v	1.3kw/hr	0.16m³

Weight of washing vegetables	Weight of washing melons and fruit	Serve for the restaurant seats
>80kg/hr	>120kg/hr	less than 200 dinner seats
>100kg/hr	>220kg/hr	200-300 dinner seats

Double Tank Vegetable Washing Machine

• Save 70% water compare with hand wash, it is more than ten times efficiency.



Code: 0300500545

Size(mm)	Water tank size(mm)	Power consumption	Capacity of sink	Power input
1500x760x960	730x550x350& 660x550x350	1.3kw/hr	0.16m³	1300w/220v

Weight of washing melons and fruit	Weight of washing vegetables	Serve for the restaurant seats
>220kg/hr	>100kg/hr	200-300 dinner seats

Meat Defrosting /Revitalizing Machine

•Save 70% water compare with hand wash, it is more than ten times efficiency.



Code: 0300500546

Size(mm)	Water tank Size	Capacity of sink	Power input	Weight of washing meat	Power consumption
1000x850x960	910x680x360mm	0.161m³	1600w/220v	>30-35kg/hr	1.6kw/hr

Vegetable Spin Dryers

- Frenquency motor
- Advanced Sand blasting technology from German
- Touch screen control panel
- Emergency stop buttom is equipped.
- No injury to those vegetables



Code: 0300500527

Dimension(mm)	Output	Voltage	Power(kW)
860x560x950	300-600KG/H	380V/50HZ	1.5

Salad Spinner(VEGETABLE SPIN DRYER)

- Innovative brakes effectively improve the service lifetime of gear
- Sealed rotation to ensure the food safety
- Can be rotated in any direction
- Suitalbe for kitchen, restaurants, & hotel

19L
Code: 0300500547

9.5L
Code: 0300500548



Code	Product Size(mm)	Capacity	NW	GW
0300500547	Φ465x565	19L/5Gal	4.3kg	14kg
0300500548	Φ395x470	9.5L/2.5Gal	3.3kg	15kg



NTSmart Tel.+86-20-89301818/28/38 CHINA nts@ntsmart.com
NTSmart Tel.+95-1-7534400 MYANMAR nts@ntsmyanmar.com.mm
NTSmart Tel.+66-2-8667474 THAILAND sales@ntsmart.co.th
NTSmart Tel.+255-22-2700674/75 TANZANIA ntstz@ntsmart.com

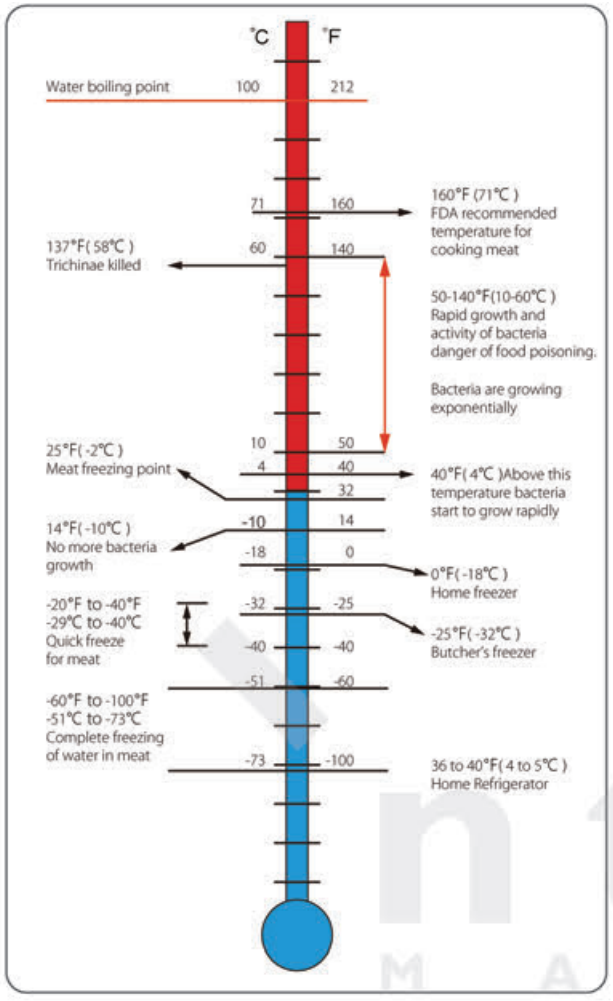

Table 1. shows suitable temperatures for foods storage

Products	Temperature
Canned foods and bottled water	7 to 10°C
Fruits and vegetables	5 to 8°C
Pastry flour	3 to 5°C
Cooked meat	3 to 5°C
Dairy products e.g. cream	2 to 4°C
Fresh meat	-1 to -1°C
Fresh poultry	-1 to -1°C
Fresh fish and seafood	-2 to 0°C
Frozen ready to eat food	-21 to -18°C
Frozen seafood and meat	-21 to -18°C
Ice cream	-23 to -21°C

Table 2. shows temperatures with bacteria growth rate

	Temperature (°C)		
	Lowest	Suitable	Highest
Bacteria can grow well at high temperatures (Thermophiles)	40 to 45	55 to 75	60 to 90
Bacteria can grow well at moderate temperatures (Mesophiles)	5 to 15	30 to 40	40 to 47
Bacteria can grow well at high temperatures (Psychrophiles)	-5 to 5	12 to 15	15 to 20
Bacteria can grow well at moderate temperatures, but can tolerate low temperatures (Psychrotrophs)	-5 to 5	25 to 30	30 to 35

Table 2 : Reveals that some bacteria can survive and grow slowly despite keeping the food in the freezer. (especially psychrophiles and psychrotrophs) There are also some groups survived despite the mild heat (Thermophiles), Therefore temperature controls the bacteria and food quality during food production and storage.

Bacteria can cause food spoilage. Freezing at low temperatures can stop the growth of bacteria and maintain food at safety level.

For fresh food or food that has been cooked for immediate consumption, temperatures in food storage is very important to the quality and safety of food.

Temperatures 15 to 45°C: A danger zone that the bacteria can grow rapidly and cause food spoilage. Do not keep food fresh and perishable foods in this temperature range

Temperatures 7 to 15°C: The bacteria grows slowly. Foods can be kept at this temperature range maximum 2-4 hours, depending on food types and properties

Temperatures below 7°C: Suitable temperatures for storing and preserving foods as some types of bacteria will not survive or grow at a very slow rate

REFRIGERATOR MANUFACTURER Turbo air

Drain Water Evaporation System

Sanitation

There is no worry of germ being inhaled into refrigerator bacause no pipe is linked to the ground.

Neatness

It has no influence on outside environment as no drain water will be ejected.

After Sales Services

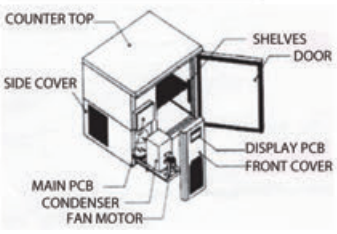

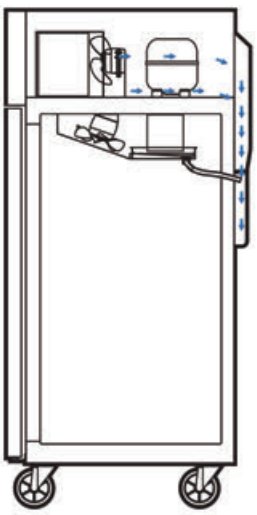

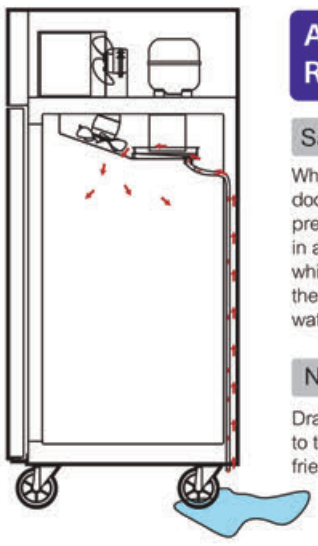

An Ordinary Refrigerator

Sanitation

When opening and closing the door,There can be a quite large pressure difference between in and outside the refrigerator which makes germ inhaled into the refrigerator through drain water pipe.

Neatness

Drain water is ejected directly to the outside floor, being not friend to environment.

Reach-In Top Mount M3 Series

REFRIGERATOR MANUFACTURER Turbo air



Reach-In Top Mount Series

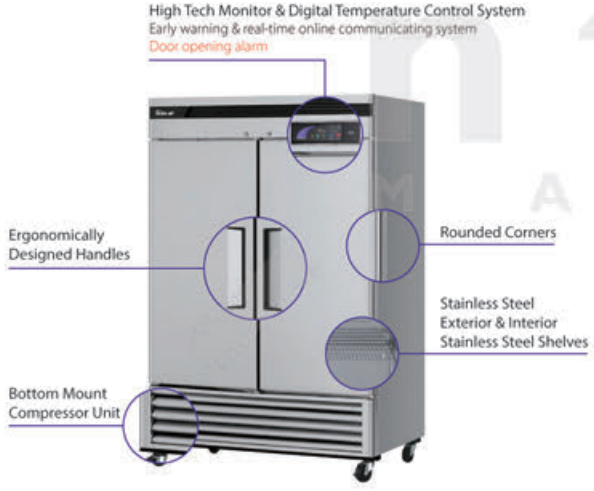

Reach-In Top Mount PREMIERE Series

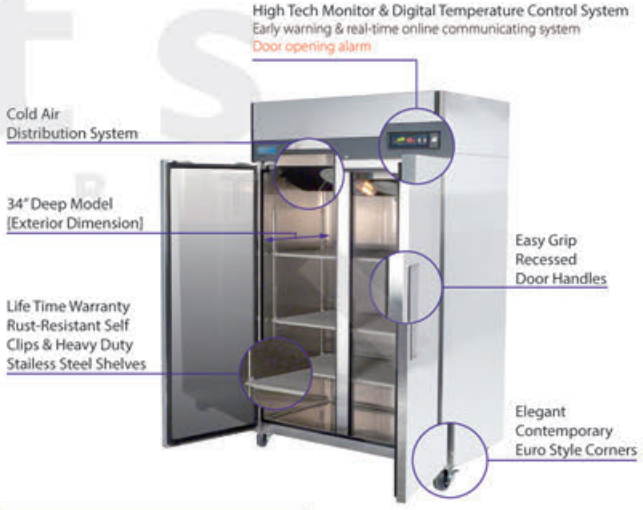

Food Prep Tables Series



Undercounter K Series

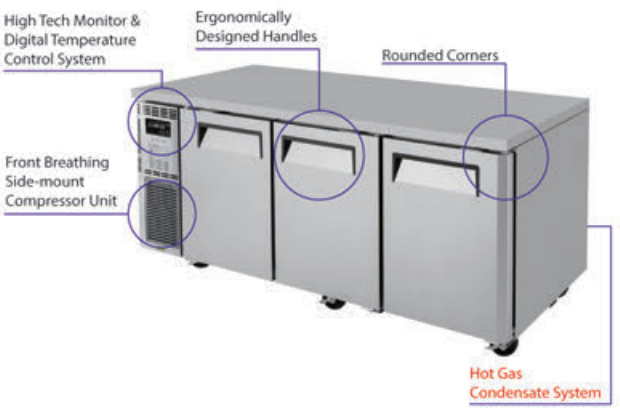

NTSmart CHINA Tel.+86-20-89301818/28/38 nts@ntsmart.com
NTSmart MYANMAR Tel.+95-1-7534400 nts@ntsmyanmar.com.mm
NTSmart THAILAND Tel.+66-2-8667474 sales@ntsmart.co.th
NTSmart TANZANIA Tel.+255-22-2700674/75 ntstz@ntsmart.com

REFRIGERATOR MANUFACTURER Turbo air

PRODUCT FEATURES



Fan Cooling Refrigeration System
- Fast cooling speed
- Keep temperature evenly by air circulation
- Preserve food fresh
- Frost free



Maximized and Convenient Storage
- capacity
- Cost saving



Quality Control International Standard
- Various certification for quality
- ISO system authorization
- 100% of all units quality test



Stainless Steel Imported from Korea
- SUS439 developed by posco
- Better hardness and anticorrosion compared with SUS034



High Efficient Compressor
- High efficient compressor (imported from France and Korea)
- It takes 35-40 minutes for the temperature to go down to -15℃
- Suitable refrigerant for the protection of environment(R-134a, R404a)
- Optimized design for fast cooling and energy saving

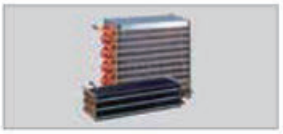

Evaporators and Condensers
- Manufactured the evaporators and condensers by ourselves make possible to keep best quality



All Copper Refrigeration System
- Anticorrosion piping material increases the life span(all copper)
- Anticorrosion painting in joint and welding parts
- Convenient service(pull-out whole condensing unit)

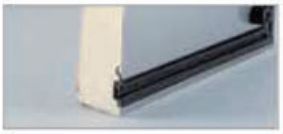

High Density Cell Insulation
- CFC free
- Anti-fire
- High density cell insulation makes to
- Keep temperature



Drain Water Evaporation System
- Self-design(patent)
- Non flow-out drain water
- Efficient maintaining kitchen clean and hygenic



Digitally Controlled Temperature System
- Self-designed temperature controller
- Beautiful and easy temperature controller in outside
- Self-diagnostic system and alarm sounds when the door is left opened



High Quality Electronic Parts
- All ectronic parts are approved UL certification
- Anti-fire insulating plastic and wire parts
- Best quality and life span



Interior LED Lighting
- Automatic on-off interior LED lighting
- Take goods more conveniently
- Typical working life of an LED can be up to 100,000 hours



Self-closing and Stay Open Door
- High quality stainless steel hinge structure
- Self-closing and stay open door makes convenient to take goods

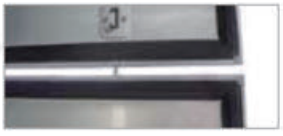

Door Connecting Device
- Self-design(patent)
- Separated upper and lower door with connecting device



Door Lock
- Safety door lock device



Ergonomic design
- Recessed door handle
- Rounded door corner
- Hygenic interior corner
- Beautiful, sturdy, clean design

HIGH TECHNOLOGY



DIGITAL TEMPERATURE CONTROL SYSTEM
Digital technology provides precise and constant temperatures throughout the cabinet. This allows products to remain fresh over an extended period of time.



FAREWELL, FLUORESCENT LIGHT
Fluorescent lights emit enoromouse amount of heat and consumes more energy Turbo Air products use LED lights to reduce energy consumption and to create greater lifespan. It also uses optimal light angles for enhancing its display effects.

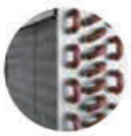

LARGER CONDENSERS
Refrigerators receive its cooling effect by discharging heat through the condenser. To achieve high efficiency in an environment (such as the kitchen) where temperatures are ambient and humidity is relatively high, it is important to increase the effectiveness of condensers. Turbo Air uses condensers that are 10-20% larger than the industry standard.

EARLY WARNING SYSTEM
Malfunctions are generally recognized when an increase in temperature is detected, 2 to 3 hours after the refrigerator had stopped running.This causes the user to become aware of malfunction issues the next morning in contents may have already spoiled. To eliminate this, Turbo Air units have a warning signals to allow for preserving contents and for preventing future problems.

SMART DEFROST SYSTEM
Generally, a refrigerator's defrost timer defrosts automatically for a fixed length of time regardless of the existing conditions of the existing conditions of the refrigerator. This makes it difficult to maintain a constant temperature and also consumes unnecessary energy. Turbo Air's "Smart Defrost System" analyzes its surrounding environments and defrosts only when it is needed to the required time. This not only saves energy but also keeps the contents of the refrigerator safe.

SELF-DIAGNOSIS SYSTEM
When a refrigerator breaks, it will immediately run a self-diagnosis to figure out what the problem is, saving both service time and unecessary expenses that couldhave occurred by misdiagnosis It also allows for broken parts to be replaced easily.

REFRIGERATOR MANUFACTURER Turbo air

UPRIGHT CHILLER / UPRIGHT FREEZER

- Frost-free, fast cooling speed fan refrigeration system with automatic defrost system keeps temperature evenly by air circulation
- Maximized and convenient storage capacity for cost saving
- SUS439 Posco Stainless steel imported from Korea with better hardness and anticorrosion compared with SUS304
- High efficient compressor imported from France and Korea for fast cooling and energy saving
- Takes 35-40 minutes for the temperature to go down to -15℃ (for freezer model)
- Evaporators and condensers manufactured by Turbo Air to ensure best quality: Our condensers are 10-20% larger than the industry standard
- All anti-corrosion copper refrigeration system increases the life span for piping material, joint and welding parts
- Convenient service (pull-out whole condensing unit)
- CFC-free and anti-fire high density cell Polyurethane insulation to keep temperature
- Patented non flow-out drain water evaporation system for hygiene and cleanliness
- Digitally controlled temperature system with self-diagnostic system,malfunction warning system and alarm sounds when the door is left opened
- Anti-fire insulating plastic and wire parts
- Automatic on-off interior LED lighting; working life up to 100,000 hours
- Self-closing and stay op6n door with high quality stainless steel hinge structure
- Separated upper and lower door with connecting device; patented design
- Safety door lock device
- Ergonomic design: recessed door handle; rounded door corner; hygienic interior corner

COUNTER CHILLER / COUNTER FREEZER

- Frost-free, fast cooling speed fan refrigeration system keeps temperature evenly by air circulation
- Maximized and convenient storage capacity for cost saving
- SUS439 Posco Stainless steel imported from Korea with better hardness and anticorrosion compared with SUS304
- High efficient compressor imported from France and Korea for fast cooling and energy saving
- Takes 35-40 minutes for the temperature to go down to -15℃ (only freezer model)
- Evaporators and condensers manufactured by Turbo Air to ensure best quality
- All anti-corrosion copper refrigeration system increases the life span for piping material, joint and welding parts
- Convenient service (pull-out whole condensing unit)
- CFC-free and anti-fire high density cell Polyurethane insulation to keep temperature
- Patented non flow-out drain water evaporation system for hygiene and cleanliness
- Digitally controlled temperature system with self-diagnostic system and alarm sounds when the door is left opened
- Anti-fire insulating plastic and wire parts
- Automatic on-off interior LED lighting; working life up to 100,000 hours
- Self-closing and stay open door with high quality stainless steel hinge structure
- Separated upper and lower door with connecting device; patented design
- Safety door lock device
- Ergonomic design: recessed door handle; rounded door corner; hygienic interior corner
- Compressor is narrowest just 270mm. It has a lot more space to work



ENERGY SAVING FAN CONTROLLER

Turbo Air engineers have researched and experimented to come up with the perfect aigorithm that stops the Fan mortor from running as soon as an increase in temperature is detected.
This ultimately translates to 15%-25% in overall energy saving as well as an increase in the overall lifespan of the compressor



BLDE COMPRESSOR & FAN MOTOR

This mechanism automatically regulates rotational speeds (compressor & fan motor) depending on its surrounding environment.which ensures increased energy efficiency and longer lifespan of the most advanced future generation refrigeration technology

Cooling Performance Analysis Table

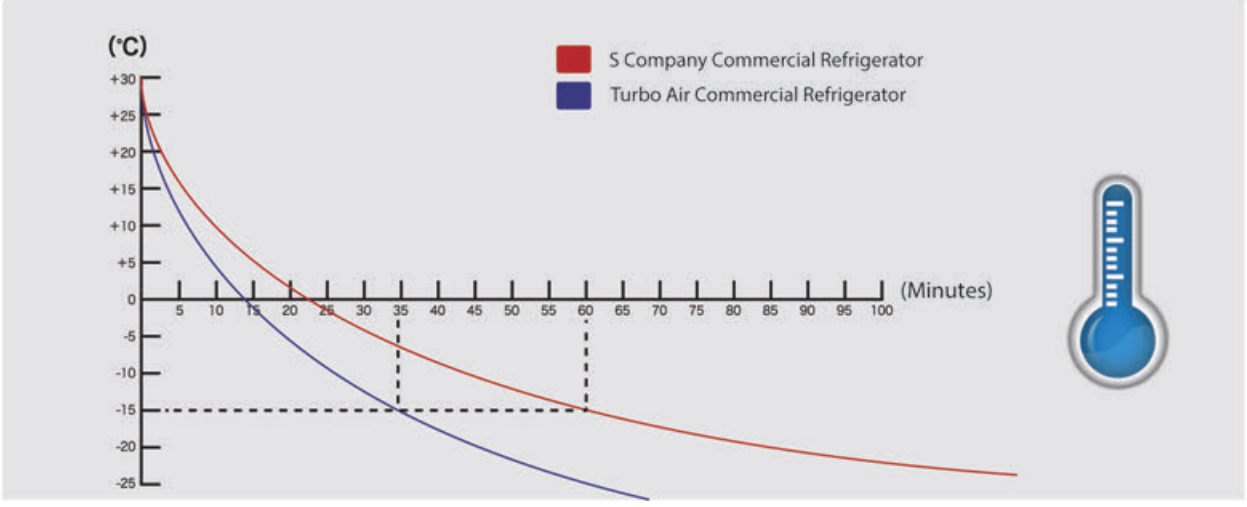

NTSmart CHINA Tel.+86-20-89301818/28/38 nts@ntsmart.com
NTSmart MYANMAR Tel.+95-1-7534400 nts@ntsmyanmar.com.mm
NTSmart THAILAND Tel.+66-2-8667474 sales@ntsmart.co.th
NTSmart TANZANIA Tel.+255-22-2700674/75 ntstz@ntsmart.com

Upright Chiller

Turbo air REFRIGERATOR MANUFACTURER

- Temperature

Chiller - (+1°C to +8°C)

Freezer - (-21°C to -12°C)

- Type of cooling : Air cooling
- Type of insulation: Polyurethane + Cyclopantane + CFC free

Main Features:

1) Fan Control System
2) Drain water Evaporation System
3) Easy Grip Access Door handle
4) PE coated shelf
5) High efficient compressor system
6) Interior LED light last up to 100,000 hr

- Aautomatic defrost system keeps temperature evenly by air circulation
- Maximized and convenient storage capacity for cost saving
- SUS439 Posco Stainless steel imported from Korea with better hardness and anticorrosion compared with SUS304
- High efficient compressor imported from France and Korea for fast cooling and energy saving
- Takes 35-40 minutes for the temperature to go down to -15°C (for freezer model)
- Evaporators and condensers manufactured by Turbo Air to ensure best quality: Our condensers are 10-20% larger than the industry standard
- All anti-corrosion copper refrigeration system increases the life span for piping material, joint and welding parts
- Self cleaning condenser : patented by Turbo Air
- Digitally controlled temperature system with self-diagnostic system, malfunction warning system and alarm sounds when the door is left opened
- Anti-fire insulating plastic and wire parts
- Self-closing and stay open door with high quality stainless steel hinge structure
- Separated upper and lower door with connecting device; patented design
- Safety door lock device
- Ergonomic design: recessed door handle; rounded door corner; hygienic interior corner
- Online monitoring system - can monitor the real time temperature of the equipment by mobile phone if the machine is online connect

1 Solid Door



Code: 0300600846

2 Solid Half Doors



Code: 0300600847

2 Solid Doors



Code: 0300600848

4 Solid Half Doors



Code: 0300600849

3 Solid Doors



Code: 0300600850

6 Solid Half Doors



Code: 0300600851

Code	Dimension(mm)	Capacity	Temperature	Refrigerant	Voltage	Power	NW
0300600846	640x800x1926	574L	+1°C to +8°C	R134a	220V/ 50Hz/ 1PH	314w	77kg
0300600847	640x800x1926	572L	+1°C to +8°C	R134a	220V/ 50Hz/ 1PH	314w	77kg
0300600848	1260x800x1926	1215L	+1°C to +8°C	R134a	220V/ 50Hz/ 1PH	366w	142kg
0300600849	1260x800x1926	1210L	+1°C to +8°C	R134a	220V/ 50Hz/ 1PH	366w	142kg
0300600850	1900x800x1926	1876L	+1°C to +8°C	R134a	220V/ 50Hz/ 1PH	732w	167kg
0300600851	1900x800x1926	1868L	+1°C to +8°C	R134a	220V/ 50Hz/ 1PH	732w	167kg

Upright Freezer

Turbo air

- Temperature
Chiller - (+1°C to +8°C)
Freezer - (-21°C to -12°C)
- Type of cooling : Air cooling
- Type of insulation: Polyurethane + Cyclopantane + CFC free

Main Features:

1) Fan Control System
2) Drain water Evaporation System
3) Easy Grip Access Door handle
4) PE coated shelf
5) High efficient compressor system
6) Interior LED light last up to 100,000 hr

- Aautomatic defrost system keeps temperature evenly by air circulation
- Maximized and convenient storage capacity for cost saving
- SUS439 Posco Stainless steel imported from Korea with better hardness and anticorrosion compared with SUS304
- High efficient compressor imported from France and Korea for fast cooling and energy saving
- Takes 35-40 minutes for the temperature to go down to -15°C (for freezer model)
- Evaporators and condensers manufactured by Turbo Air to ensure best quality: Our condensers are 10-20% larger than the industry standard
- All anti-corrosion copper refrigeration system increases the life span for piping material, joint and welding parts
- Self cleaning condenser : patented by Turbo Air
- Digitally controlled temperature system with self-diagnostic system, malfunction warning system and alarm sounds when the door is left opened
- Anti-fire insulating plastic and wire parts
- Self-closing and stay open door with high quality stainless steel hinge structure
- Separated upper and lower door with connecting device; patented design
- Safety door lock device
- Ergonomic design: recessed door handle; rounded door corner; hygienic interior corner
- Online monitoring system - can monitor the real time temperature of the equipment by mobile phone if the machine is online connect

1 Solid Door



Code: 0300600856

2 Solid Half Doors



Code: 0300600857

2 Solid Doors



Code: 0300600858

4 Solid Half Doors



Code: 0300600859

3 Solid Doors



Code: 0300600860

6 Solid Half Doors



Code: 0300600861

Code	Dimension(mm)	Capacity	Temperature	Refrigerant	Voltage	Power	NW
0300600856	640x800x1926	574L	-21°C to -12°C	R404a	220V/ 50Hz/ 1PH	496w	80kg
0300600857	640x800x1926	572L	-21°C to -12°C	R404a	220V/ 50Hz/ 1PH	496w	80kg
0300600858	1260x800x1926	1215L	-21°C to -12°C	R404a	220V/ 50Hz/ 1PH	774w	142kg
0300600859	1260x800x1926	1210L	-21°C to -12°C	R404a	220V/ 50Hz/ 1PH	774w	142kg
0300600860	1900x800x1926	1876L	-21°C to -12°C	R404a	220V/ 50Hz/ 1PH	1346w	167kg
0300600861	1900x800x1926	1868L	-21°C to -12°C	R404a	220V/ 50Hz/ 1PH	1346w	167kg

NTSmart CHINA Tel.+86-20-89301818/28/38 nts@ntsmart.com
NTSmart MYANMAR Tel.+95-1-7534400 nts@ntsmyanmar.com.mm
NTSmart THAILAND Tel.+66-2-8667474 sales@ntsmart.co.th
NTSmart TANZANIA Tel.+255-22-2700674/75 ntstz@ntsmart.com

Upright Dual Temperature

Turbo air

- Temperature

Chiller - (+1°C to +8°C)

Freezer - (-21°C to -12°C)

- Type of cooling : Air cooling
- Type of insulation: Polyurethane + Cyclopantane + CFC free

Main Features:

1) Fan Control System
2) Drain water Evaporation System
3) Easy Grip Access Door handle
4) PE coated shelf
5) High efficient compressor system
6) Interior LED light last up to 100,000 hr

- Aautomatic defrost system keeps temperature evenly by air circulation
- Maximized and convenient storage capacity for cost saving
- SUS439 Posco Stainless steel imported from Korea with better hardness and anticorrosion compared with SUS304
- High efficient compressor imported from France and Korea for fast cooling and energy saving
- Takes 35-40 minutes for the temperature to go down to -15°C (for freezer model)
- Evaporators and condensers manufactured by Turbo Air to ensure best quality: Our condensers are 10-20% larger than the industry standard
- All anti-corrosion copper refrigeration system increases the life span for piping material, joint and welding parts
- Self cleaning condenser : patented by Turbo Air
- Digitally controlled temperature system with self-diagnostic system, malfunction warning system and alarm sounds when the door is left opened
- Anti-fire insulating plastic and wire parts
- Self-closing and stay open door with high quality stainless steel hinge structure
- Separated upper and lower door with connecting device; patented design
- Safety door lock device
- Ergonomic design: recessed door handle; rounded door corner; hygienic interior corner
- Online monitoring system - can monitor the real time temperature of the equipment by mobile phone if the machine is online connect

2 Solid Half Doors

Code: 0300600866



2 Solid Doors



Code: 0300600867

4 Solid Half Doors



Code: 0300600868

3 Solid Doors



Code: 0300600869

6 Solid Half Doors



Code: 0300600870

Code	Dimension(mm)	Capacity	Chiller	Freezer	Refrigerant	Voltage	Power
0300600866	640*800*1926	R242L/F222L	+1°C to +8°C	-21°C to -12°C	R404a	220V/ 50Hz/ 1PH	366w
0300600867	1260*800*1926	R576L/F576L	+1°C to +8°C	-21°C to -12°C	R404a/ R134a	220V/ 50Hz/ 1PH	732w
0300600868	1260*800*1926	R576L/F576L	+1°C to +8°C	-21°C to -12°C	R404a/ R134a	220V/ 50Hz/ 1PH	732w
0300600869	1900*800*1926	R575L/F1235L	+1°C to +8°C	-21°C to -12°C	R404a/ R134a	220V/ 50Hz/ 1PH	1098w
0300600870	1900*800*1926	R575L/F1235L	+1°C to +8°C	-21°C to -12°C	R404a/ R134a	220V/ 50Hz/ 1PH	1098w

Counter Dual Temperature

- Temperature
Chiller - (+1°C to +8°C)
Freezer - (-21°C to -12°C)
- Type of cooling : Air cooling
- Type of insulation: Polyurethane + Cyclopantane + CFC free

Main Features:

1) Fan Control System
2) Drain water Evaporation System
3) Easy Grip Access Door handle
4) PE coated shelf
5) High efficient compressor system
6) Interior LED light last up to 100,000 hr

- Aautomatic defrost system keeps temperature evenly by air circulation
- Maximized and convenient storage capacity for cost saving
- SUS439 Posco Stainless steel imported from Korea with better hardness and anticorrosion compared with SUS304
- High efficient compressor imported from France and Korea for fast cooling and energy saving
- Takes 35-40 minutes for the temperature to go down to -15°C (for freezer model)
- Evaporators and condensers manufactured by Turbo Air to ensure best quality: Our condensers are 10-20% larger than the industry standard
- All anti-corrosion copper refrigeration system increases the life span for piping material, joint and welding parts
- Self cleaning condenser : patented by Turbo Air
- Digitally controlled temperature system with self-diagnostic system, malfunction warning system and alarm sounds when the door is left opened
- Anti-fire insulating plastic and wire parts
- Self-closing and stay open door with high quality stainless steel hinge structure
- Separated upper and lower door with connecting device; patented design
- Safety door lock device
- Ergonomic design: recessed door handle; rounded door corner; hygienic interior corner
- Online monitoring system - can monitor the real time temperature of the equipment by mobile phone if the machine is online connect

2 Solid Doors



Code: 0300600923

2 Solid Doors



Code: 0300600924

3 Solid Doors Under



Code: 0300600925

Code	Dimension(mm)	Capacity	Chiller	Freezer	Refrigerant	Voltage	Power
0300600923	1200x700x800	R121L/F136L	+1°C to +8°C	-21°C to -12°C	R134a	220V/ 50Hz/ 1PH	316w
0300600924	1500x700x800	R171L/F191L	+1°C to +8°C	-21°C to -12°C	R404a	220V/ 50Hz/ 1PH	316w
0300600925	1800x700x800	R314L/F151L	+1°C to +8°C	-21°C to -12°C	R404a	220V/ 50Hz/ 1PH	366w

NTSmart CHINA Tel.+86-20-89301818/28/38 nts@ntsmart.com
NTSmart MYANMAR Tel.+95-1-7534400 nts@ntsmyanmar.com.mm
NTSmart THAILAND Tel.+66-2-8667474 sales@ntsmart.co.th
NTSmart TANZANIA Tel.+255-22-2700674/75 ntstz@ntsmart.com

Counter Chiller

- Temperature
Chiller - (+1°C to +8°C)
Freezer - (-21°C to -12°C)
- Type of cooling : Air cooling
- Type of insulation: Polyurethane + Cyclopantane +CFC free

Main Features:
1) Fan Control System
2) Drain water Evaporation System
3) Easy Grip Access Door handle
4) PE coated shelf
5) High efficient compressor system
6) Interior LED light last up to 100,000 hr

- Aautomatic defrost system keeps temperature evenly by air circulation
- Maximized and convenient storage capacity for cost saving
- SUS439 Posco Stainless steel imported from Korea with better hardness and anticorrosion compared with SUS304
- High efficient compressor imported from France and Korea for fast cooling and energy saving
- Takes 35-40 minutes for the temperature to go down to -15°C (for freezer model)
- Evaporators and condensers manufactured by Turbo Air to ensure best quality: Our condensers are 10-20% larger than the industry standard
- All anti-corrosion copper refrigeration system increases the life span for piping material, joint and welding parts
- Self cleaning condenser : patented by Turbo Air
- Digitally controlled temperature system with self-diagnostic system, malfunction warning system and alarm sounds when the door is left opened
- Anti-fire insulating plastic and wire parts
- Self-closing and stay open door with high quality stainless steel hinge structure
- Separated upper and lower door with connecting device; patented design
- Safety door lock device
- Ergonomic design: recessed door handle; rounded door corner; hygienic interior corner
- Online monitoring system - can monitor the real time temperature of the equipment by mobile phone if the machine is online connect

1 Solid Door



Code: 0300600875

2 Solid Doors



Code: 0300600876

2 Solid Doors



Code: 0300600877

3 Solid Doors



Code: 0300600878

Code	Dimension(mm)	Capacity	Chiller	Refrigerant	Voltage	Power	NW
0300600875	900x700x800	198L	+1°C to +8°C	R134a	220V/ 50Hz/ 1PH	314w	72kg
0300600876	1200x700x800	311L	+1°C to +8°C	R134a	220V/ 50Hz/ 1PH	314w	84kg
0300600877	1500x700x800	425L	+1°C to +8°C	R134a	220V/ 50Hz/ 1PH	314w	93kg
0300600878	1800x700x800	538L	+1°C to +8°C	R134a	220V/ 50Hz/ 1PH	366w	109kg

Counter Chiller

3 Drawers



Code: 0300600893

3 Drawers + 1 Door



Code: 0300600894

6 Drawers



Code: 0300600895

3 Drawers+ 1 Door



Code: 0300600896

6 Drawers



Code: 0300600897

3 Drawers + 2 Doors



Code: 0300600898

6 Drawers + 1 Door



Code: 0300600899

9 Drawers



Code: 0300600900

Code	Dimension(mm)	Capacity	Chiller	Refrigerant	Voltage	Power	NW
0300600893	900x700x850	198L	+1°C to +8°C	R134a	220V/ 50Hz/ 1PH	314w	84kg
0300600894	1200x700x850	311L	+1°C to +8°C	R134a	220V/ 50Hz/ 1PH	314w	97kg
0300600895	1200x700x850	311L	+1°C to +8°C	R134a	220V/ 50Hz/ 1PH	314w	106kg
0300600896	1500x700x850	425L	+1°C to +8°C	R134a	220V/ 50Hz/ 1PH	314w	107kg
0300600897	1500x700x850	425L	+1°C to +8°C	R134a	220V/ 50Hz/ 1PH	314w	116kg
0300600898	1800x700x850	538L	+1°C to +8°C	R134a	220V/ 50Hz/ 1PH	366w	126kg
0300600899	1800x700x850	538L	+1°C to +8°C	R134a	220V/ 50Hz/ 1PH	366w	135kg
0300600900	1800x700x850	538L	+1°C to +8°C	R134a	220V/ 50Hz/ 1PH	366w	144kg

NTSmart CHINA Tel.+86-20-89301818/28/38 nts@ntsmart.com
NTSmart MYANMAR Tel.+95-1-7534400 nts@ntsmyanmar.com.mm
NTSmart THAILAND Tel.+66-2-8667474 sales@ntsmart.co.th
NTSmart TANZANIA Tel.+255-22-2700674/75 ntstz@ntsmart.com

Counter Freezer

1 Solid Door

Code: 0300600879



2 Solid Door

Code: 0300600880



2 Solid Door

Code: 0300600881



3 Solid Door

Code: 0300600882



Code	Dimension(mm)	Capacity	Temperature	Refrigerant	Voltage	Power	NW
0300600879	900x700x800	198L	-21°C to -12°C	R134a	220V/ 50Hz/ 1PH	366w	72kg
0300600880	1200x700x800	311L	-21°C to -12°C	R404a	220V/ 50Hz/ 1PH	613w	84kg
0300600881	1500x700x800	425L	-21°C to -12°C	R404a	220V/ 50Hz/ 1PH	613w	93kg
0300600882	1800x700x800	538L	-21°C to -12°C	R404a	220V/ 50Hz/ 1PH	613w	109kg

Counter Freezer

3 Drawers



Code: 0300600918

3 Drawers + 1 Door



Code: 0300600919

6 Drawers



Code: 0300600920

3 Drawers + 1 Door



Code: 0300600921

6 Drawers



Code: 0300600922

Code	Dimension(mm)	Capacity	Temperature	Refrigerant	Voltage	Power	NW
0300600918	900x700x850	198L	-21°C to -12°C	R134a	220V/ 50Hz/ 1PH	366w	84kg
0300600919	1200x700x850	311L	-21°C to -12°C	R134a	220V/ 50Hz/ 1PH	366w	97kg
0300600920	1200x700x850	311L	-21°C to -12°C	R134a	220V/ 50Hz/ 1PH	366w	106kg
0300600921	1500x700x850	425L	-21°C to -12°C	R134a	220V/ 50Hz/ 1PH	366w	107kg
0300600922	1500x700x850	425L	-21°C to -12°C	R134a	220V/ 50Hz/ 1PH	366w	116kg

Glass Door Upright Chiller

- Temperature
  Chiller - (+1°C to +8°C)
  Freezer- (-21°C to -12°C)
- Type of cooling : Air cooling
- Type of insulation: Polyurethane + Cyclopantane + CFC free

Main Features:

(1) Fan Control System (2) Drain water Evaporation System
(3) Easy Grip Access Door handle (4) PE coated shelf
(5) High efficient compressor system
(6) Interior LED light last up to 100,000 hr

- Aautomatic defrost system keeps temperature evenly by air circulation
- Maximized and convenient storage capacity for cost saving
- SUS439 Posco Stainless steel imported from Korea with better hardness and anticorrosion compared with SUS304
- High efficient compressor imported from France and Korea for fast cooling and energy saving
- Takes 35-40 minutes for the temperature to go down to -15°C (for freezer model)
- All anti-corrosion copper refrigeration system increases the life span for piping material, joint and welding parts
- Evaporators and condensers manufactured by Turbo Air to ensure best quality: Our condensers are 10-20% larger than the industry standard
- Self cleaning condenser : patented by Turbo Air
- Digitally controlled temperature system with self-diagnostic system, malfunction warning system and alarm sounds when the door is left opened
- Anti-fire insulating plastic and wire parts
- Self-closing and stay open door with high quality stainless steel hinge structure
- Separated upper and lower door with connecting device; patented design
- Safety door lock device
- Ergonomic design: recessed door handle; rounded door corner; hygienic interior corner
- Online monitoring system - can monitor the real time temperature of the equipment by mobile phone if the machine is online connect."

1 Glass Door



Code: 0300600926

2 Glass Half Doors



Code: 0300600927

2 Glass Doors



Code: 0300600928

4 Glass Half Doors



Code: 0300600929

3 Glass Doors



Code: 0300600930

6 Gass Half Doors



Code: 0300600931

Code	Dimension(mm)	Capacity	Temperature	Refrigerant	Voltage	Power	NW
0300600926	640x800x1926	574L	+1°C to +8°C	R134a	220V/ 50Hz/ 1PH	314w	87kg
0300600927	640x800x1926	572L	+1°C to +8°C	R134a	220V/ 50Hz/ 1PH	314w	87kg
0300600928	1260x800x1926	1215L	+1°C to +8°C	R134a	220V/ 50Hz/ 1PH	366w	152kg
0300600929	1260x800x1926	1210L	+1°C to +8°C	R134a	220V/ 50Hz/ 1PH	366w	152kg
0300600930	1900x800x1926	1876L	+1°C to +8°C	R134a	220V/ 50Hz/ 1PH	732w	177kg
0300600931	1900x800x1926	1868L	+1°C to +8°C	R134a	220V/ 50Hz/ 1PH	732w	177kg

NTSmart CHINA Tel.+86-20-89301818/28/38 nts@ntsmart.com
NTSmart MYANMAR Tel.+95-1-7534400 nts@ntsmyanmar.com.mm
NTSmart THAILAND Tel.+66-2-8667474 sales@ntsmart.co.th
NTSmart TANZANIA Tel.+255-22-2700674/75 ntstz@ntsmart.com

Glass Door Upright Freezer

Turbo air

1 Glass Door



Code: 0300600932

2 Glass Half Doors



Code: 0300600933

2 Glass Doors



Code: 0300600934

4 Glass Half Doors



Code: 0300600935

Code	Dimension(mm)	Capacity	Temperature	Refrigerant	Voltage	Power	NW
0300600932	640x800x1926	574L	-12°C to -21°C	R404a	220V/ 50Hz/ 1PH	660w	95kg
0300600933	640x800x1926	572L	-12°C to -21°C	R404a	220V/ 50Hz/ 1PH	366w	107kg
0300600934	1260x800x1926	1215L	-12°C to -21°C	R404a	220V/ 50Hz/ 1PH	976w	170kg
0300600935	1260x800x1926	1210L	-12°C to -21°C	R404a	220V/ 50Hz/ 1PH	976w	170kg

Glass Doors Counter Chiller

1 Glass Door



Code: 0300600936

2 Glass Doors



Code: 0300600937

2 Glass Doors



Code: 0300600938

3 Glass Doors



Code: 0300600939

Code	Dimension(mm)	Capacity	Chiller	Refrigerant	Voltage	Power	NW
0300600936	900x700 (600)x800	121L	+1°C to +8°C	R134a	220V/ 50Hz/ 1PH	314w	80kg
0300600937	1200x700 (600)x800	309L	+1°C to +8°C	R134a	220V/ 50Hz/ 1PH	314w	96kg
0300600938	1500x700 (600)x800	420L	+1°C to +8°C	R134a	220V/ 50Hz/ 1PH	314w	110kg
0300600939	1800x700(600)x800	516L	+1°C to +8°C	R404a	220V/ 50Hz/ 1PH	366w	127kg

Salad Preparation Counter (Buffet)

- Temperature
  Chiller - (+1°C to +8°C)
  Freezer - (-21°C to -12°C)
- Type of cooling : Air cooling
- Type of insulation: Polyurethane + Cyclopantane +CFC free
- Main Features:

1) Fan Control System
2) Drain water Evaporation System
3) Easy Grip Access Door handle
4) PE coated shelf
5) High efficient compressor system
6) Interior LED light last up to 100,000 hr

- Aautomatic defrost system keeps temperature evenly by air circulation
- Maximized and convenient storage capacity for cost saving
- SUS439 Posco Stainless steel imported from Korea with better hardness and anticorrosion compared with SUS304
- High efficient compressor imported from France and Korea for fast cooling and energy saving
- Takes 35-40 minutes for the temperature to go down to -15°C (for freezer model)
- Evaporators and condensers manufactured by Turbo Air to ensure best quality: Our condensers are 10-20% larger than the industry standard
- All anti-corrosion copper refrigeration system increases the life span for piping material, joint and welding parts
- Self cleaning condenser : patented by Turbo Air
- Digitally controlled temperature system with self-diagnostic system, malfunction warning system and alarm sounds when the door is left opened
- Anti-fire insulating plastic and wire parts
- Self-closing and stay open door with high quality stainless steel hinge structure
- Separated upper and lower door with connecting device; patented design
- Safety door lock device
- Ergonomic design: recessed door handle; rounded door corner; hygienic interior corner
- Online monitoring system - can monitor the real time temperature of the equipment by mobile phone if the machine is online connect



Code	Dimension(mm)	Capacity	Temperature	Refrigerant	Voltage	Power	NW
0300600944	900x700x800	213L	+1°C to +8°C	R134a	220V/ 50Hz/ 1PH	314w	70kg
0300600945	1200x700x800	309L	+1°C to +8°C	R134a	220V/ 50Hz/ 1PH	314w	82kg
0300600946	1500x700x800	420L	+1°C to +8°C	R134a	220V/ 50Hz/ 1PH	314w	91kg
0300600947	1800x700x800	516L	+1°C to +8°C	R134a	220V/ 50Hz/ 1PH	366w	107kg
0300600948	900x700x978	213L	+1°C to +8°C	R134a	220V/ 50Hz/ 1PH	314w	75kg
0300600949	1200x700x978	309L	+1°C to +8°C	R134a	220V/ 50Hz/ 1PH	314w	89kg
0300600950	1500x700x978	420L	+1°C to +8°C	R134a	220V/ 50Hz/ 1PH	314w	100kg
0300600951	1800x700x978	516L	+1°C to +8°C	R134a	220V/ 50Hz/ 1PH	366w	120kg

NTSmart CHINA Tel.+86-20-89301818/28/38 nts@ntsmart.com
NTSmart MYANMAR Tel.+95-1-7534400 nts@ntsmyanmar.com.mm
NTSmart THAILAND Tel.+66-2-8667474 sales@ntsmart.co.th
NTSmart TANZANIA Tel.+255-22-2700674/75 ntstz@ntsmart.com

Salad Preparation Counter

1 Solid Door



Code: 0300600944

2 Solid Doors



Code: 0300600945

2 Solid Doors



Code: 0300600946

1 Solid Door



Code: 0300600948

2 Solid Doors



Code: 0300600949

2 Solid Doors



Code: 0300600950

3 Solid Doors



Code: 0300600947

3 Solid Doors



Code: 0300600951

Pizza Preparation Counter

- Temperature
  Chiller - (+1°C to +8°C)
  Freezer - (-21°C to -12°C)
- Type of cooling : Air cooling
- Type of insulation: Polyurethane + Cyclopantane + CFC free
- Main Features:

1) Fan Control System
2) Drain water Evaporation System
3) Easy Grip Access Door handle
4) PE coated shelf
5) High efficient compressor system
6) Interior LED light last up to 100,000 hr

- Aautomatic defrost system keeps temperature evenly by air circulation
- Maximized and convenient storage capacity for cost saving
- SUS439 Posco Stainless steel imported from Korea with better hardness and anticorrosion compared with SUS304
- High efficient compressor imported from France and Korea for fast cooling and energy saving
- Takes 35-40 minutes for the temperature to go down to -15°C (for freezer model)
- Evaporators and condensers manufactured by Turbo Air to ensure best quality: Our condensers are 10-20% larger than the industry

Standard

- All anti-corrosion copper refrigeration system increases the life span for piping material, joint and welding parts
- Self cleaning condenser : patented by Turbo Air
- Digitally controlled temperature system with self-diagnostic system, malfunction warning system and alarm sounds when the door is left opened
- Anti-fire insulating plastic and wire parts
- Self-closing and stay open door with high quality stainless steel hinge structure
- Separated upper and lower door with connecting device; patented design
- Safety door lock device
- Ergonomic design: recessed door handle; rounded door corner; hygienic interior corner
- Online monitoring system - can monitor the real time temperature of the equipment by mobile phone if the machine is online connect

1 Solid Door



Code: 0300600953

2 Solid Doors



Code: 0300600954

3 Solid Doors



Code: 0300600955

Code	Dimension(mm)	Capacity	Temperature	Refrigerant	Voltage	Power	NW
0300600953	1117x820x1069	396L	+1°C to +8°C	R134a	220V/ 50Hz/ 1PH	366w	140kg
0300600954	1702x820x1069	566L	+1°C to +8°C	R134a	220V/ 50Hz/ 1PH	560w	187kg
0300600955	2362x820x1069	878L	+1°C to +8°C	R404a	220V/ 50Hz/ 1PH	660w	262kg

NTSmart CHINA Tel.+86-20-89301818/28/38 nts@ntsmart.com
NTSmart MYANMAR Tel.+95-1-7534400 nts@ntsmyanmar.com.mm
NTSmart THAILAND Tel.+66-2-8667474 sales@ntsmart.co.th
NTSmart TANZANIA Tel.+255-22-2700674/75 ntstz@ntsmart.com

Upright Chiller

- Special coating for a more durable evaporator
- Efficient cooling with improved defrost system
- Drain heater available
- Removable refrigerant unit (for easy service & maintenance)
- Removable door gaskets
- Advanced electric controller with clear digital display
- Automatic closing doors reduces energy consumption
- Full height handle
- Adjustable Legs
- Rounded edges for easy cleaning

2 Solid half Doors



Code: 0300600852

4 Solid half Doors



Code: 0300600853



Code: 0300600854

6 Solid half Doors



Code: 0300600855

Code	Dimension(mm)	Capacity	Temperature	Refrigerant	Voltage	Power	NW
0300600852	700x800x2050	600 L	-2°C to +12°C	R134a	220V/ 50Hz	410w	111kg
0300600853	1200x800x2050	1100 L	-2°C to +12°C	R134a	220V/ 50Hz	560w	130kg
0300600854	1400x800x2050	1300 L	-2°C to +12°C	R134a	220V/ 50Hz	610w	152kg
0300600855	1800x800x2050	1720 L	-2°C to +12°C	R134a	220V/ 50Hz	790w	203kg

Upright Freezer

2 Solid half Doors



Code: 0300600862

4 Solid half Doors



Code: 0300600863



Code: 0300600864

6 Solid half Doors



Code: 0300600865

Code	Dimension	Capacity	Temperature	Refrigerant	Voltage	Power	NW
0300600862	700x800x2050mm	600 L	-23°C to -7°C	R404a	220V/ 50Hz	670w	111kg
0300600863	1200x800x2050mm	1100 L	-23°C to -7°C	R404a	220V/ 50Hz	1030w	140kg
0300600864	1400x800x2050mm	1300 L	-23°C to -7°C	R404a	220V/ 50Hz	1150w	152kg
0300600865	1800x800x2050mm	1720 L	-23°C to -7°C	R404a	220V/ 50Hz	1210w	213kg

Upright Chiller & Freezer

- Special coating for a more durable evaporator
- Efficient cooling with improved defrost system
- Drain heater available
- Removable refrigerant unit (for easy service & maintenance)
- Removable door gaskets
- Advanced electric controller with clear digital display
- Automatic closing doors reduces energy consumption
- Full height handle
- Adjustable Legs
- Rounded edges for easy cleaning

2 Solid half Doors



Code: 0300600871

4 Solid half Doors



Code: 0300600872

6 Solid half Doors



Code: 0300600873



Code: 0300600874

Code	Dimension	Capacity	Chiller	Freezer	Refrigerant	Voltage	Power
0300600871	700x800x2050	R260L/F280L	-2°C to +12°C	-23°C to -7°C	R134a/ R404a	220 V/ 50 Hz	1030w
0300600872	1200x800x2050	R454L/F454L	-2°C to +12°C	-23°C to -7°C	R134a/ R404a	220 V/ 50 Hz	1140w
0300600873	1400x800x2050	R550L/F550L	-2°C to +12°C	-23°C to -7°C	R134a/ R404a	220 V/ 50 Hz	1320w
0300600874	1800x800x2050	R1025L/F498L	-2°C to +12°C	-23°C to -7°C	R134a/ R404a	220 V/ 50 Hz	1140w

Counter Chiller

2 Solid Doors



Code: 0300600886

Code: 0300600887

3 Solid Doors



Code: 0300600888

Code	Dimension(mm)	Capacity	Chiller	Refrigerant	Voltage	Power	NW
0300600886	1200x750x850	307L	-2°C to +12°C	R134a	220 V/ 50 Hz	350w	73kg
0300600887	1500x750x850	420L	-2°C to +12°C	R134a	220 V/ 50 Hz	360w	87kg
0300600888	1800x750x850	530L	-2°C to +12°C	R134a	220 V/ 50 Hz	380w	101kg

NTSmart CHINA Tel.+86-20-89301818/28/38 nts@ntsmart.com
NTSmart MYANMAR Tel.+95-1-7534400 nts@ntsmyanmar.com.mm
NTSmart THAILAND Tel.+66-2-8667474 sales@ntsmart.co.th
NTSmart TANZANIA Tel.+255-22-2700674/75 ntstz@ntsmart.com

Counter Freezer

- Special coating for a more durable evaporator
- Efficient cooling with improved defrost system
- Drain heater available
- Removable refrigerant unit (for easy service & maintenance)
- Removable door gaskets
- Advanced electric controller with clear digital display
- Automatic closing doors reduces energy consumption
- Full height handle
- Adjustable Legs
- Rounded edges for easy cleaning

2 Solid Doors



Code: 0300600168

Code: 0300600169

3 Solid Doors



Code: 0300600170

Code	Dimension(mm)	Capacity	Chiller	Refrigerant	Voltage	Power	NW
0300600168	1200x750x850	307L	-23°C to -7°C	R404a	220 V/ 50 Hz	670w	78kg
0300600169	1500x750x850	420L	-23°C to -7°C	R404a	220 V/ 50 Hz	710w	93kg
0300600170	1800x750x850	530L	-23°C to -7°C	R404a	220 V/ 50 Hz	710w	107kg



Upright Chiller

KITCHBOX

- Powerful Embraco/ Secop Compressor
- Silent & rapid fan cooling system
- Digital Temperature Control System
- Equipped with lock
- Automatic drain water evaporation system included
- S.S bullet footing/ Castors available on options
- Removable door seal for hygene
- Automatic Defrosting

1 Solid Door



Code: 0300600407

2 Solid Doors



Code: 0300600411

3 Solid Doors



Code: 0300600415

2 Solid Half Doors



Code: 0300600409

4 Solid Half Doors



Code: 0300600413

6 Solid Half Doors



Code: 0300600417

Code	Dimension(mm)	Capacity	Temperature	Refrigerant	Voltage	Ambient Temperature
0300600407	620x760x2002	450 L	0 ~ +10°C	R134a	220V/ 50 Hz	43°C
0300600411	1220x760x2002	950 L	0 ~ +10°C	R134a	220V/ 50 Hz	43°C
0300600415	1835x760x2002	1500 L	0 ~ +10°C	R134a	220V/ 50 Hz	43°C
0300600409	620x760x2002	450 L	0 ~ +10°C	R134a	220V/ 50 Hz	43°C
0300600413	1220x760x2002	950 L	0 ~ +10°C	R134a	220V/ 50 Hz	43°C
0300600417	1835x760x2002	1500 L	0 ~ +10°C	R134a	220V/ 50 Hz	43°C

NTSmart CHINA Tel.+86-20-89301818/28/38 nts@ntsmart.com
NTSmart MYANMAR Tel.+95-1-7534400 nts@ntsmyanmar.com.mm
NTSmart THAILAND Tel.+66-2-8667474 sales@ntsmart.co.th
NTSmart TANZANIA Tel.+255-22-2700674/75 ntstz@ntsmart.com

Upright Freezer

KITCHBOX

- Powerful Embraco/ Secop Compressor
- Silent & rapid fan cooling system
- Digital Temperature Control System
- Equipped with lock
- Automatic drain water evaporation system included
- S.S bullet footing/ Castors available on options
- Removable door seal for hygene
- Automatic Defrosting

1 Solid Door



Code: 0300600395

2 Solid Doors



Code: 0300600399

3 Solid Doors



Code: 0300600403

2 Solid Half Doors



Code: 0300600397

4 Solid Half Doors



Code: 0300600401

6 Solid Half Doors



Code: 0300600405

Code	Dimension(mm)	Capacity	Temperature	Refrigerant	Voltage	Ambient Temperature
0300600395	620x760x2002	450 L	-22 ~ -10°C	R404a	220V/ 50 Hz	43°C
0300600399	1220x760x2002	950 L	-22 ~ -10°C	R404a	220V/ 50 Hz	43°C
0300600403	1835x760x2002	1500 L	-22 ~ -10°C	R404a	220V/ 50 Hz	43°C
0300600397	620x760x2002	450 L	-22 ~ -10°C	R404a	220V/ 50 Hz	43°C
0300600401	1220x760x2002	950 L	-22 ~ -10°C	R404a	220V/ 50 Hz	43°C
0300600405	1835x760x2002	1500 L	-22 ~ -10°C	R404a	220V/ 50 Hz	43°C

Counter Chiller

KITCHBOX

2 Solid Doors
Code: 0300601019

2 Solid Doors
Code: 0300601020

3 Solid Doors
Code: 0300601021



Code	Dimension(mm)	Capacity	Temperature	Refrigerant	Voltage	Ambient Temperature
0300601019	1200x700x850	225L	0 ~ +10°C	R134a	220 V/ 50 Hz	43°C
0300601020	1500x700x850	325L	0 ~ +10°C	R134a	220 V/ 50 Hz	43°C
0300601021	1800x700x850	455L	0 ~ +10°C	R134a	220 V/ 50 Hz	43°C

Counter Chiller

- Powerful Embraco/ Secop Compressor
- Silent & rapid fan cooling system
- Digital Temperature Control System
- Equipped with lock
- Automatic Defrosting
- Automatic drain water evaporation system included
- S.S bullet footing/ Castors available on options
- Removable door seal for hygene

1 Solid Door



Code: 0300600883

3 Solid Doors



Code: 0300600832

2 Solid Doors



Code: 0300600884

4 Solid Doors



Code: 0300600885

Code	Dimension(mm)	Capacity	Chiller	Refrigerant	Voltage	Ambient Temperature
0300600883	1200x700x850	228L	0 ~ +10°C	R134a	220V/ 50Hz	43°C
0300600884	1360x700x850	288L	0 ~ +10°C	R134a	220V/ 50Hz	43°C
0300600832	1798x700x850	445L	0 ~ +10°C	R134a	220V/ 50Hz	43°C
0300600885	2240x700x850	602L	0 ~ +10°C	R134a	220V/ 50Hz	43°C

NTSmart CHINA Tel.+86-20-89301818/28/38 nts@ntsmart.com
NTSmart MYANMAR Tel.+95-1-7534400 nts@ntsmyanmar.com.mm
NTSmart THAILAND Tel.+66-2-8667474 sales@ntsmart.co.th
NTSmart TANZANIA Tel.+255-22-2700674/75 ntstz@ntsmart.com

Counter Chiller

KITCHBOX

- Powerful Embraco/ Secop Compressor
- Silent & rapid fan cooling system
- Digital Temperature Control System
- Equipped with lock
- Automatic drain water evaporation system included
- S.S bullet footing/ Castors available on options
- Removable door seal for hygene
- Automatic Defrosting
- Removable cooling system for easy cleaning & maintenance

1 Door/ 2 Drawers



Code: 0300600901

1 Door/ 3 Drawers



Code: 0300600902

4 Drawers



Code: 0300600903

6 Drawers



Code: 0300600904

2 Doors/ 2 Drawers



Code: 0300600905

2 Doors/ 3 Drawers



Code: 0300600906

1 Door/ 4 Drawers



Code: 0300600907

1 Door/ 6 Drawers



Code: 0300600908

Code	Dimension(mm)	Capacity	Chiller	Refrigerant	Voltage	Ambient Temperature
0300600901	1360x700x850	280L	0 ~ +10°C	R134a	220V/ 50Hz	43°C
0300600902	1360x700x850	280L	0 ~ +10°C	R134a	220V/ 50Hz	43°C
0300600903	1360x700x850	280L	0 ~ +10°C	R134a	220V/ 50Hz	43°C
0300600904	1360x700x850	280L	0 ~ +10°C	R134a	220V/ 50Hz	43°C
0300600905	1798x700x850	440L	0 ~ +10°C	R134a	220V/ 50Hz	43°C
0300600906	1798x700x850	440L	0 ~ +10°C	R134a	220V/ 50Hz	43°C
0300600907	1798x700x850	440L	0 ~ +10°C	R134a	220V/ 50Hz	43°C
0300600908	1798x700x850	440L	0 ~ +10°C	R134a	220V/ 50Hz	43°C

Counter Chiller

KITCHBOX

- Powerful Embraco/ Secop Compressor
- Silent & rapid fan cooling system
- Digital Temperature Control System
- Equipped with lock
- Automatic drain water evaporation system included
- S.S bullet footing/ Castors available on options
- Removable door seal for hygene
- Automatic Defrosting
- Removable cooling system for easy cleaning & maintenance

6 Drawers



Code: 0300600909

9 Drawers



Code: 0300600910

3 Doors +2 Drawers



Code: 0300600911

3 Doors +3 Drawers



Code: 0300600912

2 Doors +4 Drawers



Code: 0300600913

1 Door+6 Drawers



Code: 0300600914

1 Door +9 Drawers



Code: 0300600915

8 Drawers



Code: 0300600916

12 Drawers



Code: 0300600917

Code	Dimension(mm)	Capacity	Chiller	Refrigerant	Voltage	Ambient Temperature
0300600909	1798x700x850	440L	0 ~ +10°C	R134a	220V/ 50Hz	43°C
0300600910	1798x700x850	440L	0 ~ +10°C	R134a	220V/ 50Hz	43°C
0300600911	2240x700x850	602L	0 ~ +10°C	R134a	220V/ 50Hz	43°C
0300600912	2240x700x850	602L	0 ~ +10°C	R134a	220V/ 50Hz	43°C
0300600913	2240x700x850	602L	0 ~ +10°C	R134a	220V/ 50Hz	43°C
0300600914	2240x700x850	602L	0 ~ +10°C	R134a	220V/ 50Hz	43°C
0300600915	2240x700x850	602L	0 ~ +10°C	R134a	220V/ 50Hz	43°C
0300600916	2240x700x850	602L	0 ~ +10°C	R134a	220V/ 50Hz	43°C
0300600917	2240x700x850	602L	0 ~ +10°C	R134a	220V/ 50Hz	43°C

NTSmart CHINA Tel.+86-20-89301818/28/38 nts@ntsmart.com
NTSmart MYANMAR Tel.+95-1-7534400 nts@ntsmyanmar.com.mm
NTSmart THAILAND Tel.+66-2-8667474 sales@ntsmart.co.th
NTSmart TANZANIA Tel.+255-22-2700674/75 ntstz@ntsmart.com

Counter Freezer

KITCHBOX

2 Solid Doors
Code: 0300601022

2 Solid Doors
Code: 0300601023

3 Solid Doors
Code: 0300601024



Code	Dimension(mm)	Capacity	Temperature	Refrigerant	Voltage	Ambient Temperature
0300601022	1200x700x850	252L	-18 ~ -10°C	R404a	220 V/ 50 Hz	43°C
0300601023	1500x700x850	325L	-18 ~ -10°C	R404a	220 V/ 50 Hz	43°C
0300601024	1800x700x850	455L	-18 ~ -10°C	R404a	220 V/ 50 Hz	43°C

Counter Freezer

- Powerful Embraco/ Secop Compressor
- Silent & rapid fan cooling system
- Digital Temperature Control System
- Equipped with lock
- Automatic drain water evaporation system included
- S.S bullet footing/ Castors available on options
- Removable door seal for hygene
- Automatic Defrosting

1 Solid Door



Code: 0300600889

3 Solid Doors



Code: 0300600891

2 Solid Doors



Code: 0300600890

4 Solid Doors



Code: 0300600892

Code	Dimension(mm)	Capacity	Chiller	Refrigerant	Voltage	Ambient Temperature
0300600889	1200x700x850	228L	-18 ~ - 10°C	R404a	220V/ 50Hz	43°C
0300600890	1360x700x850	288L	-18 ~ - 10°C	R404a	220V/ 50Hz	43°C
0300600891	1798x700x850	445L	-18 ~ - 10°C	R404a	220V/ 50Hz	43°C
0300600892	2240x700x850	602L	-18 ~ - 10°C	R404a	220V/ 50Hz	43°C

Glass Door Upright Chiller

KITCHBOX

- Powerful Embraco/ Secop Compressor
- Silent & rapid fan cooling system
- Digital Temperature Control System
- Equipped with lock
- Automatic drain water evaporation system included
- S.S bullet footing/ Castors available on options
- Removable door seal for hygene
- Automatic Defrosting
- Double layer glass door -including 1 heating layer to avoid the forming of moisture on the glass door

1 Glass Door



Code: 0300600384

2 Glass Doors



Code: 0300600447

3 Glass Doors



Code: 0300600391

2 Glass Half Doors



Code: 0300600386

4 Glass Half Door



Code: 0300600389

6 Glass Half Door



Code: 0300600393

Code	Dimension(mm)	Capacity	Temperature	Refrigerant	Voltage	Ambient Temperature
0300600384	620x760x2002	450 L	0 ~ +10°C	R134a	220V/ 50 Hz	43°C
0300600447	1220x760x2002	950 L	0 ~ +10°C	R134a	220V/ 50 Hz	43°C
0300600391	1835x760x2002	1500 L	0 ~ +10°C	R134a	220V/ 50 Hz	43°C
0300600386	620x760x2002	450 L	0 ~ +10°C	R134a	220V/ 50 Hz	43°C
0300600389	1220x760x2002	950 L	0 ~ +10°C	R134a	220V/ 50 Hz	43°C
0300600393	1835x760x2002	1500 L	0 ~ +10°C	R134a	220V/ 50 Hz	43°C

NTSmart CHINA Tel.+86-20-89301818/28/38 nts@ntsmart.com
NTSmart MYANMAR Tel.+95-1-7534400 nts@ntsmyanmar.com.mm
NTSmart THAILAND Tel.+66-2-8667474 sales@ntsmart.co.th
NTSmart TANZANIA Tel.+255-22-2700674/75 ntstz@ntsmart.com

Glass Door Upright Freezer

KITCHBOX

- Powerful Embraco/ Secop Compressor
- Silent & rapid fan cooling system
- Digital Temperature Control System
- Equipped with lock
- Automatic drain water evaporation system included
- S.S bullet footing/ Castors available on options
- Removable door seal for hygene
- Automatic Defrosting
- Double layer glass door -including 1 heating layer to avoid the forming of moisture on the glass door

1 Glass Door



Code: 0300600380

2 Glass Doors



Code: 0300600382

3 Glass Doors



Code: 0300601095

Code	Dimension(mm)	Capacity	Temperature	Refrigerant	Voltage	Ambient Temperature
0300600380	620x760x2002	450 L	-10 ~ -18°C	R404a	220V/ 50 Hz	43°C
0300600382	1220x760x2002	950 L	-10 ~ -18°C	R404a	220V/ 50 Hz	43°C
0300601095	1835x760x2002	1500 L	-10 ~ -18°C	R404a	220V/ 50 Hz	43°C

Undercounter Chiller

- Powerful Embraco/ Secop Compressor
- Silent & rapid fan cooling system
- Digital Temperature Control System
- Equipped with lock
- Automatic drain water evaporation system included
- S.S bullet footing/ Castors available on options
- Removable door seal for hygene
- Automatic Defrosting

2 Glass Doors



Code: 0300600940

3 Glass Doors



Code: 0300600941

4 Glass Doors



Code: 0300600942

Code	Dimension(mm)	Capacity	Chiller	Refrigerant	Voltage	Ambient Temperature
0300600940	1360x700x850	228L	0 ~ +10°C	R134a	220V/ 50Hz	43°C
0300600941	1798x700x850	445L	0 ~ +10°C	R134a	220V/ 50Hz	43°C
0300600942	2240x700x850	602L	0 ~ +10°C	R134a	220V/ 50Hz	43°C

American Style Salad Counter

KITCHBOX

- Powerful Embraco/ Secop Compressor
- Silent & rapid fan cooling system
- Digital Temperature Control System
- Equipped with lock
- Automatic drain water evaporation system included
- S.S bullet footing/ Castors available on options
- Removable door seal for hygene
- Automatic Defrosting
- Removable cooling system for easy cleaning & maintenance

Code: 0300600952



Dimension(mm)	Capacity	Temperature	Refrigerant	Voltage	Ambient Temperature
1230x777x1131	249L	0 ~ +10°C	R134a	220V/ 50 Hz	43°C

Salad Bar

KITCHBOX

- Removable refrigeration unit
- SUS 430 & SUS 304 for surface/ SUS 304 for interior

1 Door
Code: 0300600795

2 Doors
Code: 0300600796



Code	Dimension(mm)	Temperature Range	Refrigerant	Voltage	Cooling type
0300600795	750x760x1050	2 ~ 5°C	R143a	220-240V/ 50-60 Hz	Air-cooling
0300600796	1225x760x1050	2 ~ 5°C	R143a	220-240V/ 50-60 Hz	Air-cooling

3 Solid Doors Pizza Preperation Table

KITCHBOX

- Powerful Embraco/ Secop Compressor
- Silent & rapid fan cooling system
- Digital Temperature Control System
- Equipped with lock
- Automatic drain water evaporation system included
- S.S bullet footing/ Castors available on options
- Removable door seal for hygene
- Automatic Defrosting
- Removable cooling system for easy cleaning & maintenance

Code: 0300600956



Dimension(mm)	Capacity	Temperature	Refrigerant	Voltage	Ambient Temperature
1800x700x890	445L	0 ~ +10°C	R134a	220V/ 50 Hz	43°C

NTSmart Tel.+86-20-89301818/28/38 CHINA nts@ntsmart.com
NTSmart Tel.+95-1-7534400 MYANMAR nts@ntsmyanmar.com.mm
NTSmart Tel.+66-2-8667474 THAILAND sales@ntsmart.co.th
NTSmart Tel.+255-22-2700674/75 TANZANIA ntstz@ntsmart.com

Pizza Preparation Counter

KITCHBOX

- Removable refrigeration unit
- SUS 430 & SUS 304 for surface/ SUS 304 for interior

2 Doors
Code: 0300600957

2 Doors
Code: 0300600958

3 Doors
Code: 0300600844



Code	Dimension(mm)	Temperature Range	Refrigerant	Voltage	Cooling type
0300600957	1480x810x1050	2 ~ 8°C	R143a	220-240V/ 50-60 Hz	Air-cooling
0300600958	1820x810x1050	2 ~ 8°C	R143a	220-240V/ 50-60 Hz	Air-cooling
0300600844	2180x810x1050	2 ~ 8°C	R143a	220-240V/ 50-60 Hz	Air-cooling

Sandwiches Preparation Counter

KITCHBOX

- Removable refrigeration unit
- SUS 430 & SUS 304 for surface/ SUS 304 for interior

2 Doors
Code: 0300600959

2 Doors
Code: 0300600960

3 Doors
Code: 0300600845



Code	Dimension(mm)	Temperature Range	Refrigerant	Voltage	Cooling type
0300600959	1480x700x1250	2 ~ 8°C	R143a	220-240V/ 50-60 Hz	Air-cooling
0300600960	1820x700x1250	2 ~ 8°C	R143a	220-240V/ 50-60 Hz	Air-cooling
0300600845	2180x700x1250	2 ~ 8°C	R143a	220-240V/ 50-60 Hz	Air-cooling

Blast Freezer

- Equip with temperature probe
- Easy to clean self closing door
- Material is AISI 304 stainless steel
- Ventilated cooling system
- High density insulation body
- Dixell - digital temperature controller
- Compressor : Embraco/ Tecumesh
- Smart automatic defrosting system
- Interior body with round corner for easy cleaning
- Climate Type: T (Max. Ambient temperature: 38°C)





Code: 0300600766





Code: 0300600943

Code	Dimension(mm)	Capacity(litre)	Temperature	Refrigerant	Voltage	Power	NW
0300600766	800x800x1000	5x1/1 GN/ 100L	+30°C to -40°C	R404a	220V	880w	75kg
0300600943	800x800x1800	10x1/1 GN/ 250L	+30°C to -40°C	R404a	220V	1800w	150kg

Walk in Cold Room

The cold room is an object which is used for storage when the space achieves specific temperature through artificial refrigeration. It is an object for processing and storage. it can supply a range of modular cold and freeze rooms.



Highly popular with catering companies, public houses and hotel chains these modular coldrooms offer a fast , cost effective solution to your temperature controlled storage requirements.
Tough and durable both inside and out these modular coldrooms are fully food-safe and meet the most demanding of export standards for hygiene. The polyurethane cold storage board is foamed by high pressure mould and the temperature could be coordi-nated between-5 C and -20 C, or even lower.



PRODUCT FEATURES

Best performance with Copeland compressor

Thickness:
60mm,75mm,100mm,120mm,
150mm,175mm,200mm

Material:
colorbond painted steel or stainless steel

Door Type:
hinged type door or sliding type door

Temperature design type:
Keep fresh with temperature: +5to-5℃
Keep chiller with temperature: -5 to-15℃
Keep freezer with temperature: -15 to-25℃
Blast freezer with temperature: -30 to-40℃

TYPE CODE

- Foaming: Polyurethane
- Panel model: SII、PVC
- Cooling system:Refrigeration/Frozen
- Temp:0 ℃ to10 ℃/-15 ℃ to-18 ℃
- Panel material: Stainless/Embossed aluminum /Colored powder-coated/Composite steel plate

APPLICATION


Fruits & Vegetables


Quick-freezing Food


MediCine


Cold Chain Logistics


Edible Species


Aquatic Species

NTSmart CHINA Tel.+86-20-89301818/28/38 nts@ntsmart.com
NTSmart MYANMAR Tel.+95-1-7534400 nts@ntsmyanmar.com.mm
NTSmart THAILAND Tel.+66-2-8667474 sales@ntsmart.co.th
NTSmart TANZANIA Tel.+255-22-2700674/75 ntstz@ntsmart.com

Condenser unit



Condenser unit



Fin type evaporator





Fin type evaporator



Emboss aluminum sheet on bottom optional

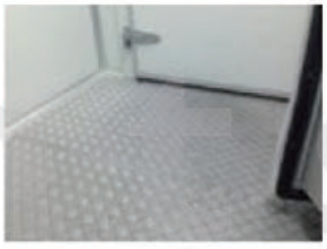

DISPLAY SHOWCASE



Panel transporting



Installing



Outside



Inside

Remote Open Chiller (AVMR-A)

- Expansive Valve : Danfoss
- Compressor : without compressor
- Fan Motor : EBM
- End Wall Style : Glass/Solid/Mirror
- Refrigerant : R404A
- Temperature(℃) : 2 ~ 8℃

Optional Feature

- LED cabinet lighting Color
- RAL color options
- Manual night blind(standard)
- Shelf layers amount
- SS plate / plastic bottom front bumper protection
- Interior in stainless steel
- Optional price holder
- The size can be customizated.

Width: 1250mm / 1875mm / 2500mm / 2813mm / 3750mm



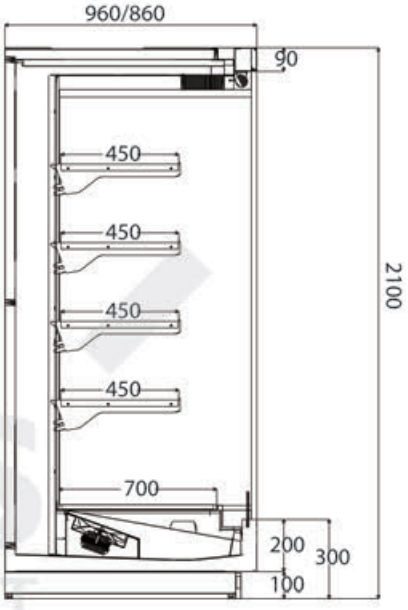



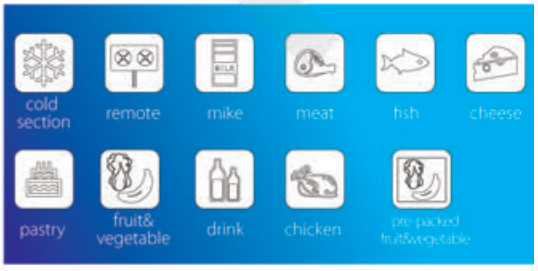





	Width(mm)	Deep(mm)	Height(mm)	End wall thickness(mm)
AVMR-A	1250 , 1875 , 2500 , 2813 , 3750	860 / 960	2100	40+40

NTSmart CHINA Tel.+86-20-89301818/28/38 nts@ntsmart.com
NTSmart MYANMAR Tel.+95-1-7534400 nts@ntsmyanmar.com.mm
NTSmart THAILAND Tel.+66-2-8667474 sales@ntsmart.co.th
NTSmart TANZANIA Tel.+255-22-2700674/75 ntstz@ntsmart.com

Remote Open Chiller (AVMR-C)

- Expansive Valve : Danfoss
- Compressor : without compressor
- Fan Motor : EBM
- End Wall Style : Glass/Solid/Mirror
- Refrigerant : R404A
- Temperature(℃): 2 ~ 8℃

Optional Feature

- LED cabinet lighting Color
- RAL color options
- Manual night blind(standard)
- Shelf layers amount
- SS plate / plastic bottom front bumper protection
- Interior in stainless steel
- Optional price holder
- The size can be customizated.

Width: 1920mm / 2440mm / 2880mm / 3660mm



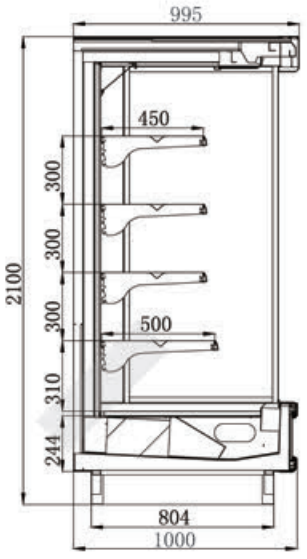



Remote Open Chiller (AVMR-D)

Width: 1920mm / 2440mm / 2880mm



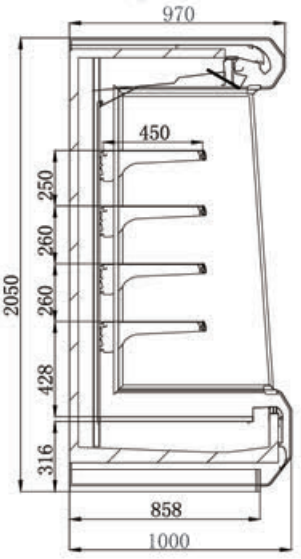

	Width(mm)	Deep(mm)	Height(mm)	End wall thickness(mm)
AVMR-C	1920, 2440, 2880, connect	1000	2100	80+80
AVMR-D	1920, 2440, 2880, 2813, connect	1000	2050	50+50

Remote Closed Display Chiller(AVMR-AR)

- Compressor : without compressor
- Fan Motor : EBM,Expansive Valve : Danfoss
- End Wall Style : Glass/Solid/Mirror
- Refrigerant : R404A
- AVMR-AR:Temperature(℃): 2 ~ 8℃
- AVMR-AF:Temperature(℃): -18 ~ -25℃

Optional Feature

- LED cabinet lighting Color
- RAL color options
- Manual night blind(standard)
- Shelf layers amount
- The size can be customizated.
- SS plate / plastic bottom front bumper protection
- Interior in stainless steel
- Optional price holder



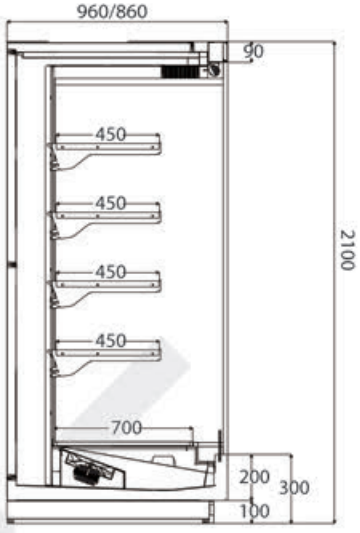

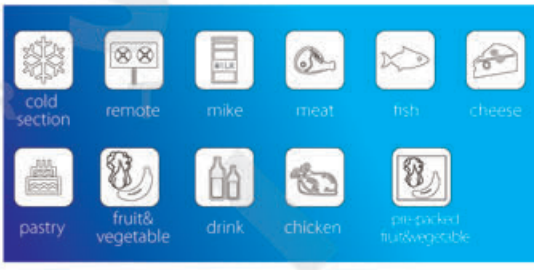

Remote Closed Display Chiller(AVMR-AF)

Width: 1560mm / 2330mm / 3100mm



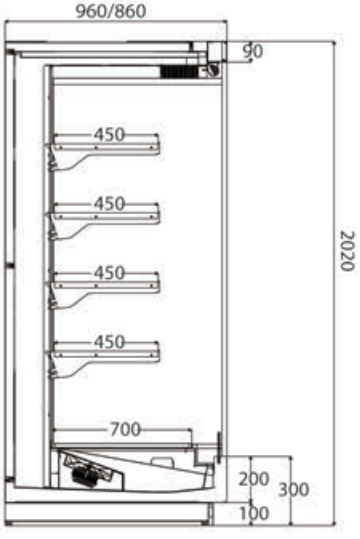

	Width(mm)	Deep(mm)	Height(mm)	End wall thickness(mm)
AVMR-AR	1250, 1875, 2500, 2813, 3750	860 / 960	2100	40+40
AVMR-AF	1560, 2330, 3100	860 / 960	2020	60+60

NTSmart Tel.+86-20-89301818/28/38 CHINA nts@ntsmart.com
NTSmart Tel.+95-1-7534400 MYANMAR nts@ntsmyanmar.com.mm
NTSmart Tel.+66-2-8667474 THAILAND sales@ntsmart.co.th
NTSmart Tel.+255-22-2700674/75 TANZANIA ntstz@ntsmart.com

Plug In Open Chiller(AVMP-A)

- Refrigeration system : Plug in
- Ambient condition: 26℃ / 65% RH
- Number of shelves: 4 PCS
- Power supply: 220V / 380V-50Hz / 60Hz
- Operating temperature: +2 to +8℃
- Expansive Valve : Danfoss
- Compressor : Sanyo/Embraco
- Fan Motor : EBM
- End Wall Style : Glass/Solid/Mirror

Optional Feature

- LED cabinet lighting Color
- RAL color options
- Manual night blind(standard)
- Shelf layers amount
- SS plate / plastic bottom front bumper protection
- Interior in stainless steel
- The size can be customizated.

- Refrigerant : R404A, R134A, R290



AVMP-A

Width: 1955mm / 2893mm / 2580mm



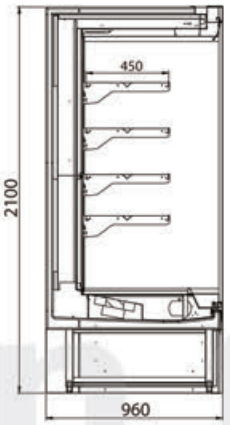

AVMP-C

Width: 2080mm / 2600mm / 3040mm(80mm)



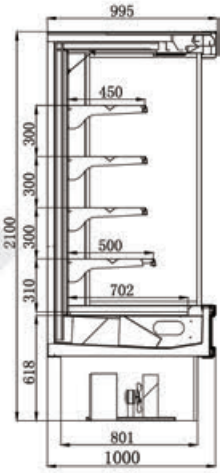

	Width(mm)	Deep(mm)	Height(mm)	End wall thickness
AVMP-A	1330, 1955, 2580, 2893, connected	860 / 960	2100	40+40
AVMP-C	1580, 2080, 2660, 3040, connected	860 / 960	2100	40+40

Plug In Open Chiller(AVMP-D)

- Compressor : Embraco
- Fan Motor : EBM,Expansive Valve : Danfoss
- End Wall Style : Glass/Solid/Mirror
- Refrigerant : R404A
- Temperature(℃) : 2 ~ 8℃

Optional Feature

- LED cabinet lighting Color
- RAL color options
- Manual night blind(standard)
- Shelf layers amount
- SS plate / plastic bottom front bumper protection
- Interior in stainless steel
- Optional price holder
- The size can be customizated.

Width: 1520mm / 2000mm / 2520mm / 2960mm



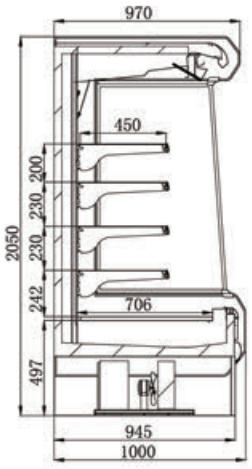

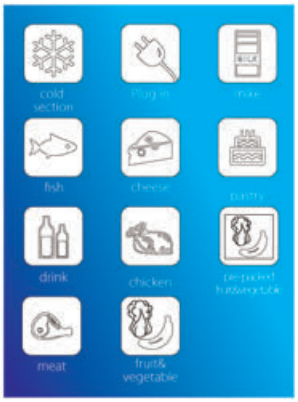

	Width(mm)	Deep(mm)	Height(mm)	End wall thickness(mm)
AVMP-D	1520, 2000, 2520, 2960, connected	850 / 1000	2050	50+50

- Expansive Valve : Danfoss
- Compressor : without compressor
- Fan Motor : EBM
- End Wall Style : Glass/Solid/Mirror
- Refrigerant : R404A

Optional Feature
- LED cabinet lighting Color
- RAL color options
- Manual night blind(standard)
- Shelf layers amount

- SS plate / plastic bottom front bumper protection
- Interior in stainless steel
- Optional price holder
- The size can be customizated.
- Temperature(℃): 2 ~ 8℃

Remote Open Semi Vertical Multicks(ASVMR-A)

Width: 1875mm / 2500mm / 2813mm / 3750 (40mm)



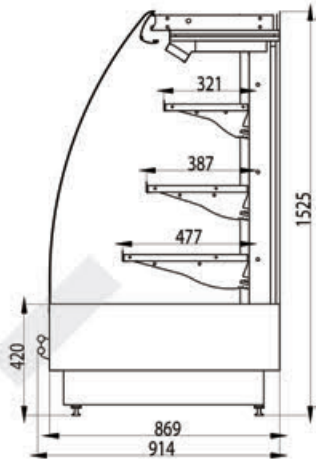



Plug-in Open Semi Vertical Multicks (ASVMP-A)

Width: 1955mm / 2580mm / 2893mm



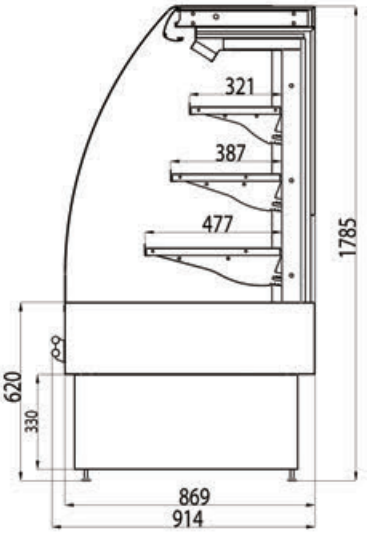

	Width(mm)	Deep(mm)	Height(mm)	End wall thickness(mm)
ASVMR-A	1875, 2500, 3750, connect	915	1525	40+40
ASVMP-A	1955, 2580, 3830, connect	915	1785	40+40

NTSmart Tel.+86-20-89301818/28/38 CHINA nts@ntsmart.com
NTSmart Tel.+95-1-7534400 MYANMAR nts@ntsmyanmar.com.mm
NTSmart Tel.+66-2-8667474 THAILAND sales@ntsmart.co.th
NTSmart Tel.+255-22-2700674/75 TANZANIA ntstz@ntsmart.com

- Refrigerated serve-over cabinet with fan-assisted air circulation
- Superstructure with front supports
- Red LED lighting
- Foam-filled carcass with internal stainless steel parts
- High quality,easy to clean materials
- Refrigerant: R134a / R404A / R290
- Evaporator coil with cataphoresis protection fins,off-cycle defrost
- Energy-saving fans,air discharge with honeycomb
- Graceful appearances with arc-cornor type for option
- Ambient condition: 26°C / 65% RH
- Power supply:220V/380V-50Hz/60Hz
- Operating temperature: -3 to +5°C
- Cooling system: Fan cooling
- Throttle modes:Capillary
- Compressor:Embraco(ASCP-A, ASCP-B)
- Compressor:Without(ASCR-A, ASCR-B)
- Fan motor : EBM
- Work top table : Stainless steel plate
- Electric phase:1 phase(≤5HP)
- The size can be customizated.

Fresh Meat Serve-Over Plug in Counter

ASCP-A

Width: 1090mm / 1410mm / 2035mm / 2660mm / 3000mm / 3910mm



ASCP-B

Width: 1300mm / 1520mm / 2000mm / 2520mm / 2960mm / 3740mm





Fresh Meat Serve-Over Remote Counter

ASCR-A

Width: 937mm / 1250mm / 1875mm / 2500mm / 3750mm



ASCR-B

Width: 1440mm / 1920mm / 2880mm / 3660mm



	Width(mm)	Deep	Height	End wall thickness	Display Area(m^2)
ASCP-A	1097, 1410, 2035, 2660, 3010,3910, R1600, connect	1150mm	915mm	80+80mm	0.78, 1.04, 1.56, 2.08,2.37, 3.11, 3.02, N
ASCP-B	1300, 1520, 2000, 2520, 2960,Customized	1200mm	890mm	40+40mm	1.02, 1.20, 1.6, 2.0,2.3, N
ASCR-A	937, 1250, 1875, 2500, 3750,R1600, connect	1150mm	915mm	80+80mm	0.78, 1.04, 1.56, 2.08,2.37, 3.11, 3.02, N
ASCR-B	1220, 1440, 1920, 2440, 2880,Customized	1200mm	890mm	40+40mm	1.02, 1.20, 1.6, 2.4,2.3, N

- Refrigerated serve-over cabinet with fan-assisted air circulation
- Superstructure with front supports
- Red LED lighting
- Foam-filled carcass with internal stainless steel parts
- High quality,easy to clean materials
- Refrigerant: R134a / R404A / R290
- Evaporator coil with cataphoresis protection fins,off-cycle defrost
- Energy-saving fans,air discharge with honeycomb
- Graceful appearances with arc-cornor type for option
- Ambient condition: 26°C / 65% RH
- Power supply:220V/380V-50Hz/60Hz
- Operating temperature: -3 to +5°C
- Cooling system: Fan cooling
- Throttle modes:Capillary
- Compressor:Embraco
- Fan motor : EBM
- Work top table : Stainless steel plate
- Electric phase:1 phase(≤5HP)/
- The size can be customizated.



Fresh Meat Serve-Over Counter

MINI STYLE (ASCP-C-M)

Width: 1520mm / 2000mm / 2520mm / 2960mm / 3740mm



2 LAYERS STYLE (ASCP-C-T)

Width: 1520mm / 2000mm / 2520mm / 2960mm / 3740mm



Fresh Meat Serve-Over Counter

Double Zones(ASCP-DD)

Width: 2000mm / 2520mm / 2960mm



Single Zone(ASCP-DS)

Width: 1520mm / 2000mm / 2520mm / 2960mm / 3750mm



	Width(mm)	Deep	Height	End wall Thickness	Display Area(m^2)	Input power(W)
ASCP-C-M	2000, 2520, 2960, Customized	950mm	930mm	40+40mm	0.92, 1.17, 1.38, N	
ASCP-C-T	2000, 2520, 2960, Customized	1050mm	1050mm	40+40mm	1.92, 2.44, 2.88, N	
ASCP-DD	2000, 2520, 2960, Customized	1600mm	930mm		3.4, 4.2, 5, N	885x2, 1100x2, 1130x2, N
ASCP-DS	1520, 2000, 2520, 2960,Customized	1200mm	930mm		2.05, 2.7, 3.4, 4, N	675, 885, 1100, 1700, N

NTSmart Tel.+86-20-89301818/28/38 CHINA nts@ntsmart.com
NTSmart Tel.+95-1-7534400 MYANMAR nts@ntsmyanmar.com.mm
NTSmart Tel.+66-2-8667474 THAILAND sales@ntsmart.co.th
NTSmart Tel.+255-22-2700674/75 TANZANIA ntstz@ntsmart.com

Combine Island Freezer

- Glass lid: Curved Low-E tempered glass
- Interior material: Embossed aluminum sheet
- Exterior material: Prepainted aluminum plate
- Defrost type: Auto defrost
- Water away: Automatic evaporation
- Foaming thickness(mm): 70
- Evaporator: Aluminum tube winding
- Condenser: Copper tube fin
- Fan motor: EBM
- Compressor: Secop
- Digital controller: carel
- Feet style: caster/ bullet feet



Code: 0300601130



Code: 0300601131

Code: 0300601132

Code: 0300601133

Code	Dimension(mm)	Capacity(L)	Temperature	Consumption(KWxh/24h)	Voltage	Power
0300601130	1850x850x750	600	-18 ~ 25 C	7.0	220V/ 50Hz	700w
0300601131	1400x850x835	470	-18 ~ 25 C	5.5	220V/ 50Hz	680w
0300601132	2100x850x835	800	-18 ~ 25 C	11.0	220V/ 50Hz	750w
0300601133	2500x850x835	1100	-18 ~ 25 C	12.2	220V/ 50Hz	880w

Seafood Freezer

- Equip with copper tube evaporator,
- Stainless steel compartment chamber
- Aluminum alloy edge,
- Equip with LED lamp for display

Code: 0300600983

Code: 0300600697



Code	Dimension(mm)	Temperature	Refrigerant	Voltage	Power
0300600983	1226x843x710	0 ~ -8°C	R134a	220V/ 50Hz	180w
0300600697	1626x970x830	0 ~ -8°C	R134a	220V/ 50Hz	220w

Island Freezer

- Large display area,
- Heat reflective tempered glass door
- Fast refrigeration speed
- Equip with copper tube evaporator





Curved Bottom
Code: 0300600695

Flat Bottom
Code: 0300600984

Code	Dimension(mm)	Temperature	Refrigerant	Voltage	Power	NW
0300600984	1626x946x915	0 ~ -12°C	R134a	220V/ 50Hz	280 W/ 3.75 KW/24 Hr	100kg
0300600695	1626x946x772	0 ~ -18°C	R134a	220V/ 50Hz	270 W/ 3.75 KW/24 Hr	87kg

Dual Temprature Island Chiller & Freezer

- Type of cooling : Air cooling
- Type of insulation: Polyurethane + Cyclopantane + CFC free
- Corrosion-resistant prepainted steel plate
- Best performance compressor with low noisy and high efficiency
- Microcomputer CPU accurately controls and display temperature
- Option:Built-in energy saving LED lamp,better display effect
- Option:Curved sliding LOW-E tempered glass lids
- Elegant bumper for protection
- High quality interior grid with stronger load bearing
- German EBM fan motor, Danfoss compressor



Code: 0300600972

Code: 0300600973

Code	Dimension(mm)	Chiller	Freezer	Refrigerant	Voltage
0300600972	1500x1050x910	+2°C~+8°C	-20°C~-18°C	R404a	220V/ 50Hz
0300600973	2070x1050x910	+2°C~+8°C	-20°C~-18°C	R404a	220V/ 50Hz

Dual Temperature Chest Freezer & Chiller

- Double-top door dual temperature
- Flat bottom
- Fast cooling
- Thick insulation layer, better insulation
- Equip with copper tube evaporator
- Chiller temperature range: 0 ~ 10°C
- Freezer temperature range:<18°C



Code: 0300600985

Code: 0300600683

Code	Dimension(mm)	Refrigerant	Voltage	Power	NW
0300600985	1118x604x878	R600a	220V/ 50Hz/ 1PH	90 W/ 0.98 KW/24 Hr	52kg
0300600683	1374x657x878	R134a	220V/ 50Hz/ 1PH	140 W/ 1.08 KW/24 Hr	60kg

Chest Freezer - Curved Door

- Circular arc glass door cabinet, single layer heat reflection tempered glass
- Fast refrigeration speed,
- Thick insulation layer for better insulation
- Equip with copper tube evaporator



Code: 0300601025

Code: 0300600693

Code: 0300600737

Code	Dimension(mm)	Temperature	Refrigerant	Voltage	Power	NW
0300601025	1055x625x865	0 ~ -18°C	R134a	220V/ 50Hz	162 W/2.00KW/24 Hr	54kg
0300600693	1205x625x865	0 ~ -18°C	R134a	220V/ 50Hz	193 W/2.30KW/24 Hr	58kg
0300600737	1325x625x865	0 ~ -18°C	R134a	220V/ 50Hz	204 W/2.60KW/24 Hr	63kg

NTSmart Tel.+86-20-89301818/28/38 CHINA nts@ntsmart.com
NTSmart Tel.+95-1-7534400 MYANMAR nts@ntsmyanmar.com.mm
NTSmart Tel.+66-2-8667474 THAILAND sales@ntsmart.co.th
NTSmart Tel.+255-22-2700674/75 TANZANIA ntstz@ntsmart.com

Dual Temperature Chest Freezer & Chiller

- Heat reflection tempered glass door, dual temperature.
- Fast cooling.
- Thick insulation layer for better insulation
- Equip with copper tube evaporator
- Chiller temperature range: 0 ~ 10°C
- Freezer temperature range:<-18°C

Code: 0300601026

Code: 0300601027



Code	Dimension(mm)	Refrigerant	Voltage	Power	NW
0300601026	1504x704x904	R600a	220V/ 50Hz	80 W/0.9KW/24 Hr	38kg
0300601027	1784x704x904	R600a	220V/ 50Hz	105 W/1.05 KW/24 Hr	46kg

Chest Freezer / Chiller (Chiller / Freezer Convertible)

- Single door single temperature
- Freezing, refrigeration interchange
- All copper tube evaporator
- Chiller temperature range: 0 ~ 10°C
- Freezer temperature range:<-18°C

Code: 0300601028

Code: 0300600701

Code: 0300600702

Code: 0300601029



Code	Dimension(mm)	Refrigerant	Voltage	Power	NW
0300601028	1014x571x861	R600a	220V/ 50Hz	101 W/ 1.41 KW/24 Hr	47kg
0300600701	1118x571x861	R600a	220V/ 50Hz	107 W/ 1.62 KW/24 Hr	50kg
0300600702	1254x624x861	R134a	220V/ 50Hz	160 W/ 1.80 KW/24 Hr	55kg
0300601029	1374x624x861	R134a	220V/ 50Hz	191 W/ 2.20 KW/24 Hr	65kg

Chest Freezer / Chiller With Locker(Chiller / Freezer Convertible)

- Heat-reflecting tempered glass door
- Chiller / Freezer convertible
- Curved bottom, thickened insulation layer, good insulation effect
- High quality famous brand compressor, all copper tube evaporator
- Chiller temperature range: 0 ~ 10°C
- Freezer temperature range:<-18°C

Code: 0300600703

Code: 0300601030



Code	Dimension(mm)	Refrigerant	Voltage	Power	NW
0300600703	1504x702x897	R134a	220V/ 50Hz	280 W/ 2.94 KW/24 Hr	79kg
0300601030	1784x702x897	R134a	220V/ 50Hz	330 W/ 3.20 KW/24 Hr	85kg

Mini Mart Open Chiller - Plug In Type

- End wall thickness:25+25mm
- Expansive value:Danfoss
- Compressor:Sanyo
- Fan Motor:EBM
- End wall style: glass/ soild/ mirror
- Refrigerant: R404A



Code: 0300601100

Code: 0300601101

Code: 0300601102

Code: 0300601103

Code	Dimension(mm)	Voltage/ Frequency	Temperature
0300601100	965x760x2000	220 ~240 / 50Hz	2 ~ 8°C
0300601101	1220x760x2000	220 ~240 / 50Hz	2 ~ 8°C
0300601102	1830x760x2000	220 ~240 / 50Hz	2 ~ 8°C
0300601103	2440x760x2000	220 ~240 / 50Hz	2 ~ 8°C

Mini Mart Open Chiller-Remote Type

- End wall thickness:25+25mm
- Expansive value:Danfoss
- Compressor:Without compressor
- Fan Motor:EBM
- End wall style: glass/ soild/ mirror
- Refrigerant: R404A
- Optional Feature
- LED cabinet lighting Color
- RAL color options
- Manual night blind(standard)
- Shelf layers number
- SS plate / plastic bottom front bumper protection
- Interior in stainless steel
- Optional price holder



Code: 0300601104

Code: 0300601105

Code: 0300601106

Code: 0300601107

Code	Dimension(mm)	Voltage/ Frequency	Temperature
0300601104	915x760x2000	220 ~240 / 50Hz	2 ~ 8°C
0300601105	1220x760x2000	220 ~240 / 50Hz	2 ~ 8°C
0300601106	1830x760x2000	220 ~240 / 50Hz	2 ~ 8°C
0300601107	2440x760x2000	220 ~240 / 50Hz	2 ~ 8°C

NTSmart Tel.+86-20-89301818/28/38 CHINA nts@ntsmart.com
NTSmart Tel.+95-1-7534400 MYANMAR nts@ntsmyanmar.com.mm
NTSmart Tel.+66-2-8667474 THAILAND sales@ntsmart.co.th
NTSmart Tel.+255-22-2700674/75 TANZANIA ntstz@ntsmart.com

Luxury Bottom Mount Showcase Chiller

- Door open: Hinge door with Automatic rebound design
- De-fogging type: Anti-fog LOW-E tempered glass with heater
- Glass door: layer tempered glass door with electrical heating
- Glass door frame: aluminum pure with electrical heating wire
- Exterior&Interior: Colored powder-coated steel plate
- Defrost type: Auto defrost
- Water dryer: Automatic evaporation
- Evaporator: Copper tube fin(R134A) / Steel wire tube fin(R290)
- Condenser: Copper tube fin
- Fan motor: EBM
- Thermostat: Digital controller
- Compressor: Secop
- Caster: Wheel


Code: 0300601108


Code: 0300601109


Code: 0300601110


Code: 0300601111

Code	Dimension(mm)	Voltage/ Frequency	Temperature
0300601108	627x710x2000	220 ~240 / 50Hz	2 ~ 8°C
0300601109	1253x710x2000	220 ~240 / 50Hz	2 ~ 8°C
0300601110	1600x710x2000	220 ~240 / 50Hz	2 ~ 8°C
0300601111	2500x710x2000	220 ~240 / 50Hz	2 ~ 8°C

Luxury Top Mount Showcase Freezer

- Door open: Hinge door with Automatic rebound design
- De-fogging type: Anti-fog LOW-E tempered glass with heater
- Glass door: 2 layer tempered glass door with electrical heating wire
- Glass door: frame aluminum pure with electrical heating wire
- Exterior&Interior Colored powder-coated steel plate
- Defrost type - Auto defrost
- Water dryer: Automatic evaporation
- Evaporator: Copper tube fin(R134A)
- Condenser: Copper tube fin
- Fan motor: EBM
- Thermostat Digital controller
- Compressor: Secop
- Caster: Wheel


Code: 0300601112


Code: 0300601113


Code: 0300601114

Code	Dimension(mm)	Voltage/ Frequency	Temperature
0300601112	1253x710x2090	220 ~240 / 50Hz	2 ~ 8°C
0300601113	1600x710x2090	220 ~240 / 50Hz	2 ~ 8°C
0300601114	2500x710x2090	220 ~240 / 50Hz	2 ~ 8°C

Luxury Bottom Mount Showcase Freezer

- Door open: Hinge door with Automatic rebound design
- De-fogging type: Anti-fog LOW-E tempered glass with heater
- Glass door: 3 layer tempered glass door with electrical heating wire
- Glass door frame: aluminum pure with electrical heating wire
- Exterior&Interior: Colored powder-coated steel plate
- Defrost type: Auto defrost
- Water dryer: Automatic evaporation
- Evaporator: Copper tube fin(R404A)
- Condenser: Copper tube fin
- Fan motor: EBM
- Thermostat Digital controller
- Compressor: Secop
- Castor: Wheel






Code: 0300601115 Code: 0300601116 Code: 0300601117 Code: 0300601118

Code	Dimension(mm)	Voltage/ Frequency	Temperature
0300601115	627x760x2000	220 ~240 / 50Hz	-18 ~ -25°C
0300601116	1253x760x2000	220 ~240 / 50Hz	-18 ~ -25°C
0300601117	1600x760x2000	220 ~240 / 50Hz	-18 ~ -25°C
0300601118	2500x760x2000	220 ~240 / 50Hz	-18 ~ -25°C

Luxury Top Mount Showcase Freezer

- Door open :Hinge door with Automatic rebound design
- De-fogging type: Anti-fog LOW-E tempered glass with heater
- Glass door: 3 layer tempered glass door with electrical heating wire
- Glass door :frame Pure aluminum with electrical heating wire
- Exterior&Interior: Colored powder-coated steel plate
- Defrost type: Auto defrost
- Water dryer:Automatic evaporation
- Evaporator: Copper tube fin(R404A)
- Condenser: Copper tube fin
- Fan motor: EBM
- Thermostat Digital controller
- Compressor: Secop
- Castor: Wheel





Code: 0300601119 Code: 0300601120 Code: 0300601121

Code	Dimension(mm)	Voltage/ Frequency	Temperature
0300601119	1253x710x2090	220 ~240 / 50Hz	-18 ~ -25°C
0300601120	1600x710x2090	220 ~240 / 50Hz	-18 ~ -25°C
0300601121	2500x710x2090	220 ~240 / 50Hz	-18 ~ -25°C

NTSmart Tel.+86-20-89301818/28/38 CHINA nts@ntsmart.com
NTSmart Tel.+95-1-7534400 MYANMAR nts@ntsmyanmar.com.mm
NTSmart Tel.+66-2-8667474 THAILAND sales@ntsmart.co.th
NTSmart Tel.+255-22-2700674/75 TANZANIA ntstz@ntsmart.com

Luxury Remote Showcase Chiller

- Door open: Hinge door with Automatic rebound design
- De-fogging type: Anti-fog LOW-E tempered glass with heater
- Glass door: 2 layer tempered glass door with electrical heating wire
- Glass door frame: aluminum pure with electrical heating wire
- Exterior & Interior : Colored powder-coated steel plate
- Defrost type: Auto defrost
- Water dryer: External water pipe
- Evaporator: Copper tube fin(R134A)
- Condenser: Copper tube fin
- Fan motor: EBM
- Thermostat Digital controller
- Caster: Wheel

Code: 0300601122

Code: 0300601123

Code: 0300601124

Code: 0300601125



Code	Dimension(mm)	Voltage/ Frequency	Temperature
0300601122	1366x710x2000	220 ~240 / 50Hz	2 ~ 10°C
0300601123	2050x710x2000	220 ~240 / 50Hz	2 ~ 10°C
0300601124	2734x710x2000	220 ~240 / 50Hz	2 ~ 10°C
0300601125	3418x710x2000	220 ~240 / 50Hz	2 ~ 10°C

Luxury Remote Showcase Freezer

- Door open: Hinge door with Automatic rebound design
- De-fogging type: Anti-fog LOW-E tempered glass with heater
- Glass door:3 layer tempered glass door with electrical heating wire
- Glass door frame: Aluminum pure with electrical heating wire
- Exterior & Interior: Colored powder-coated steel plate
- Defrost type: Auto defrost
- Water dryer: External water pipe
- Evaporator: Copper tube fin(R134A)
- Condenser: Copper tube fin
- Fan motor: EBM
- Thermostat Digital controller
- Caster: Wheel

Code: 0300601126

Code: 0300601127

Code: 0300601128

Code: 0300601129



Code	Dimension(mm)	Voltage/ Frequency	Temperature
0300601126	1366x750x2000	220 ~240 / 50Hz	-18 ~ -25°C
0300601127	2050x750x2000	220 ~240 / 50Hz	-18 ~ -25°C
0300601128	2734x750x2000	220 ~240 / 50Hz	-18 ~ -25°C
0300601129	3418x750x2000	220 ~240 / 50Hz	-18 ~ -25°C

Back Bar Chiller

- Temperature
  Chiller - (+1°C to +8°C)
  Freezer - (-21°C to -12°C)
- Type of cooling : Air cooling
- Type of insulation: Polyurethane + Cyclopantane + CFC free
- Main Features:

1) Fan Control System
2) Drain water Evaporation System
3) Easy Grip Access Door handle
4) PE coated shelf
5) High efficient compressor system
6) Interior LED light last up to 100,000 hr

- Aautomatic defrost system keeps temperature evenly by air circulation
- Maximized and convenient storage capacity for cost saving
- SUS439 Posco Stainless steel imported from Korea with better hardness and anticorrosion compared with SUS304
- High efficient compressor imported from France and Korea for fast cooling and energy saving
- Takes 35-40 minutes for the temperature to go down to -15°C (for freezer model)
- Evaporators and condensers manufactured by Turbo Air to ensure best quality: Our condensers are 10-20% larger than the industry standard
- All anti-corrosion copper refrigeration system increases the life span for piping material, joint and welding parts
- Self cleaning condenser : patented by Turbo Air
- Digitally controlled temperature system with self-diagnostic system, malfunction warning system and alarm sounds when the door is left opened
- Anti-fire insulating plastic and wire parts
- Self-closing and stay open door with high quality stainless steel hinge structure
- Separated upper and lower door with connecting device; patented design
- Safety door lock device
- Ergonomic design: recessed door handle; rounded door corner; hygienic interior corner
- Online monitoring system - can monitor the real time temperature of the equipment by mobile phone if the machine is online connect.

2 Glass Door



Code: 0300600977



Code: 0300600978

3 Glass Door



Code: 0300600979

Code	Dimension(mm)	Capacity(L)	Temperature	Voltage	NW
0300600977	1492x692x1065	538	0~8°C	220V/ 50Hz/ 1PH	125kg
0300600978	1753x692x1065	651	0~8°C	220V/ 50Hz/ 1PH	135kg
0300600979	2296x692x1065	940	0~8°C	220V/ 50Hz/ 1PH	207kg

NTSmart CHINA Tel.+86-20-89301818/28/38 nts@ntsmart.com
NTSmart MYANMAR Tel.+95-1-7534400 nts@ntsmyanmar.com.mm
NTSmart THAILAND Tel.+66-2-8667474 sales@ntsmart.co.th
NTSmart TANZANIA Tel.+255-22-2700674/75 ntstz@ntsmart.com

Back Bar Cooler

PRIMO

• Material: Stainless Steel 304 • Compressor: Embraco



1 door
Code: 0300600980



2 door
Code: 0300600981



3 door
Code: 0300600982

Code	Dimension(mm)	Capacity(L)	Temperature	Refrigerant	Voltage	Power
0300600980	600x520x900	93	+4~+10°C	R134a	220V/ 50Hz/ 1PH	238w
0300600981	900x520x900	160	+4~+10°C	R134a	220V/ 50Hz/ 1PH	265w
0300600982	1350x520x900	262	+4~+10°C	R134a	220V/ 50Hz/ 1PH	295w

Steak Ager Fridge

PRIMO

- Seamless #304 S.S. door Frame
- Adjustable Humidity Range: 60%-85%
- Adjustable Temp. Range: 1-25 C
- With 2 layer Low-E glass and SS tube handle
- 1 pcs #304 stainless steel hanging rod with 3 pcs hooks
- Digital touchpad control
- Included UVC System and warm white LED light
- Fan cooling system
- Ventilation Plinth: SS plinth
- Refrigerant: R600a
- Humidification System: Ultrasonic humidification system



Code: 0300601086



Code: 0300601087



Code: 0300601088

Code	Body Size(mm)	Capacity(L)	Packing Size(mm)	NW
0300601086	595x570x820	127	635x640x860	42kg
0300601087	595x710x1270	270	645x777x1420	71kg
0300601088	595x710x1720	388	645x777x1870	92kg

Wine Cooler

- Free Standing
- No. of shelves: 5 pcs x beech wood shelf
- Black glass door frame with 2 layer Low-E glass
- Black tube handle
- Warm white LED strip light
- Digital touchpad control
- Fan cooling system
- Compressor: Jiaxi Pera
- Voltage:220-240V/50-60 Hz
- Refrigerant: R600a
- NW: 37kg

Code: 0100100356



Wine Cooler

- Free standing/ Built in under
- No. of shelves: 4 pcs x beech wood shelf
- Black glass door frame with 2 layer Low-E glass
- Black tube handle
- Warm white LED strip light
- Digital touchpad control
- Fan cooling system
- Compressor: Jiaxi Pera
- Ventilation plith: Yes
- Voltage:220-240V/50-60 Hz
- Refrigerant: R600a
- NW: 44kg

Code: 0100100357



Wine Cooler

- Free standing/ built in under
- No. of shelves: 4 pcs x beech wood shelf
- Black glass door frame with 2 layer Low-E glass
- Black tube handle
- Warm white LED strip light
- Digital touchpad control
- Fan cooling system
- Compressor: Jiaxi Pera
- Ventilation plith: Yes
- Voltage:220-240V/50-60 Hz
- Refrigerant: R600a

Code: 0100100358



Code	Dimension(mm)	Capacity	Temperature zone	Upper	Lower
0100100356	485x600x820	118L/ 49 bottles (750 ml)	Single	5 ~ 20°C	5 ~ 20°C
0100100357	595x570x820	119L/ 39 bottles (750 ml)	Double	12 ~ 20°C	5 ~ 12°C
0100100358	595x570x820	100L/ 40 bottles (750 ml)	Double	12 ~ 20°C	5 ~ 12°C

Wine Cooler

- Free Standing
- No. of shelves: 8 pcs x beech wood shelf
- Black glass door frame with 2 layer Low-E glass
- Black tube handle
- Warm white LED strip light
- Digital touchpad control
- Fan cooling system
- Compressor: Jiaxi Pera
- Voltage:220-240V/ 50-60 Hz
- Refrigerant: R600a
- NW: 47kg

Code: 0100100306



Code	Dimension(mm)	Capacity	Temperature zone	Upper	Lower
0100100306	480x595x1285	191L/ 77 bottles (750 ml)	Double	12 ~ 20°C	5 ~ 12°C

NTSmart Tel.+86-20-89301818/28/38 CHINA nts@ntsmart.com
NTSmart Tel.+95-1-7534400 MYANMAR nts@ntsmyanmar.com.mm
NTSmart Tel.+66-2-8667474 THAILAND sales@ntsmart.co.th
NTSmart Tel.+255-22-2700674/75 TANZANIA ntstz@ntsmart.com

Wine Cooler

- Free standing
- No. of shelves: 6 thicker beech wood shelves for 2 layer bottle stack loading each shelf
- Black glass door frame with 2 layer Low-E glass
- Black tube handle
- Warm white LED strip light
- Digital touchpad control
- Fan cooling system
- Compressor: Jiaxi Pera
- Ventilation plith: No
- Voltage:220-240V/ 50-60 Hz
- Refrigerant: R600a
- NW: 82kg

Code: 0100100307



Wine Cooler

- Free standing
- No. of shelves: 13 beech wood shelves
- Black glass door frame with 2 layer Low-E glass
- Black tube handle
- Warm white LED strip light
- Digital touchpad control
- Fan cooling system
- Compressor: Jiaxi Pera
- Ventilation plith: No
- Voltage:220-240V/ 50-60 Hz
- Refrigerant: R600a

Code: 0100100363



Code	Dimension(mm)	Capacity	Temperature zone	Upper	Lower
0100100307	560x600x1600	286L/ 114bottles (750 ml)	Single	5 ~ 20°C	5 ~ 20°C
0100100363	540x590x1600	286L/ 112 bottles (750 ml)	Single	5 ~ 20°C	5 ~ 20°C



Cube Ice Make-Air System

- Crystal Clear and hard Ice
- Ideal for Bar & drinks
- Flush back design for easy installation
- Round front door for quick access to ice
- One-piece door design and pull-out air filter for simple cleaning
- Front water valve access for easy servicability
- Sharp stainless steel exterior
- OPERATION CONDITIONS;
- Voltage Range: +/- 6%
- Ambient Temperature: 1-40℃
- Water supply: 3-35 ℃/ 7.25 to 116 PSI
- AC Supply Voltage: 220-240 V/ 50 Hz
- Leg H: 90-120 mm



65 kg
Code: 0300600986



100 kg
Code: 0300600987



220 kg(Without Bin)
Code: 0300600988



UNIQUE ICE PRODUCTION SYSTEM



ICE SIZE

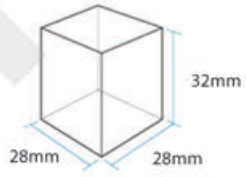

	IM-65A	IM-100A	IM-220AA
Code	0300600986	0300600987	0300600988
Dimension(mm)	660x570x800	660x570x1200	560x639x775
Ice Dimension	28x28x32mm	28x28x32mm	28x28x32mm
Refrigrant Charge	R134a	R134a	R606a
Refrigeant Range	R134a	R404a	R404a
Elecrical Consumption	390 W	550 W	950 W
Heat Rejection	910 W (783 kcal/h)	1220 W (1049 kcal/h)	2290 W (1970 kcal/h)
Freeze cycle Time	26 min	28 min	23 min
Amperage/ Starting Amp	3.2A/ 18 A	3.9A/ 9 A	5.0A/ 24 A
Storagebin Capacity	26kg	52kg	Without Bin
Water consumption per 24H	0.14 cub m^3, 2.25L/1kg of ice	0.21 cub m^3, 1.97L/1kg of ice	0.31 cub m^3, 1.7L/1kg of ice
Pack Dimension	760x680x980mm	760x680x1389mm	644x728x883mm
N.W.	60kg	76kg	69kg
Ice production per cycle	0.94 kg/ 42 pcs	1.8 kg/ 80 pcs	3.2 kg/ 140 pcs
Ice production per 24Hr (15mm)	(AT21°C/WT15°C) - 70 kg (AT21°C/WT15°C) - 62 kg (AT32°C/WT21°C) - 49 kg	(AT21°C/WT15°C) - 112 kg (AT21°C/WT15°C) - 108 kg (AT32°C/WT21°C) - 88 kg	(AT21°C/WT15°C) - 220 kg (AT21°C/WT15°C) - 200 kg (AT32°C/WT21°C) - 175 kg

NTSmart Tel.+86-20-89301818/28/38 CHINA nts@ntsmart.com
NTSmart Tel.+95-1-7534400 MYANMAR nts@ntsmyanmar.com.mm
NTSmart Tel.+66-2-8667474 THAILAND sales@ntsmart.co.th
NTSmart Tel.+255-22-2700674/75 TANZANIA ntstz@ntsmart.com

Crescent Ice Maker-Air System

- CLEAR individual Crescent ice
- Unique ice shape ideal for all kinds of drinks
- Sharp Stainless Steel Exterior
- Upward opening for easy access
- Slide-in air filter for easy cleaning
- Automatic self flushing
- Audible controller board
- Smart computer board technology

- OPERATION CONDIDTIONS;
1. Voltage Range: 198-254 V
2. Ambient Temperature: 1-40℃
3. Water supply: 5-35℃/ 7.25 to 116 PSI
4. AC supply Voltage: 220-240V/ 50Hz



50 kg
Code: 0300600108



100 kg
Code: 0300600110



270 kg(Without Bin)
Code: 0300600989







Clear Individual Crescent Ice
Upward Open door for easy access

ICE SIZE

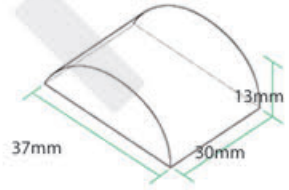

	KM-50A	KM-100A	KMD-270AA
Code	0300600108	0300600110	0300600989
Dimension(mm)	603x610x842	612x712x840	560x625x610
Ice Dimension	37x30x13mm	37x30x13mm	37x30x13mm
Refrigrant Charge	R134a	R404a	R404a
Elecrical Consumption	303 W	584 W	1030 W
Heat Rejection	920W(788kcal/h)	1250W(1075kcal/h)	2435W(2094kcal/h)
Freeze cycle Time	25 min	29 min	30 min
Amperage/ Starting Amp	2.2A/10.7A	3.4A/15A	4.9A/24A
Storagebin Capacity	23kg	45kg	Without Bin
Water consumption per 24H	0.148 m^3, 3L/1kg ice	0.22 m^3, 2.5L/1kg ice	0.54 m^3, 2.2L/1kg ice
Pack Dimension	690x705x955mm	695x800x955mm	668x727x793
N.W.	46kg	62kg	57kg
Ice production per cycle	0.95kg/110PCS	1.7kg/182PCS	5.7kg/624PCS
Ice production per 24Hr (15mm)	(AT 10C/WT 10C)-52kg (AT 21C/WT 15C)-50kg (AT 32C/WT 21C)-41kg	(AT 10C/WT 10C)-101kg (AT 21C/WT 15C)-88kg (AT 32C/WT 21C)-64kg	(AT 10C/WT 10C)-265kg (AT 21C/WT 15C)-248kg (AT 32C/WT 21C)-211kg

Flake Ice Maker-Air System

- 70%ice and 30% water
- HACCP Certified
- The carbon auger bearings enhances product life expectancy, reduces maintenance costs.
- Hydrocarbon refrigerants lowers energy consumption
- 100% hfc free CO2 foam insulation maintain consistent temperature
- Smart computer board technology
- stainless steel exterior
- LED error indicator for easy diagnosis
- OPERATION CONDIDTIONS;

1. Voltage Range: 198-254 V
2. Ambient Temperature: 1-40℃
3. Water supply: 5-35℃/ 7.25 to 116 PSI
4. AC supply Voltage: 220-240V/ 50Hz



150 kg
Code: 0300600131



300 kg(Without Bin)
Code: 0300600990



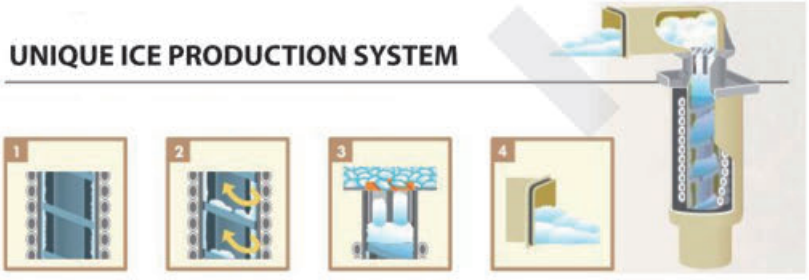

	FM-150KE	FM-300AKE
Code	0300600131	0300600990
Ice Shape	Flake	Flake
Dimension (mm)	640x600x711 (89-120 mm leg)	560x700x780
Referigerant	R134a	R404a
Heat Rejection	1120W(963kcal/h)	2200 W (1891 kcal/h)
Freeze cycle time	26 min	26 min
Amperage/ Starting Amp	5.1A/ 20A	5.8A / 19A
Elecrical Consumption	640 W	1000 W
N.W.	71kg	80 kg
Water Consumption 24 hr	0.13 m^3, 1L/1KG ice	0.29$m^3$3, 1L/1kg ice
Pack Size (mm)	746x706x887	671x820x971
Storagebin capacity	26kg	Without Blin
Ice production per 24Hr (Flake/ Nugget)	(AT 10C/WT 10C)- 150KG (AT 21C/WT 15C)- 130KG (AT 32C/WT 21C)- 110 KG	(AT 10C/WT 10C) - 320 kg (AT 21C/WT 15C) - 260 kg (AT 32C/WT 21C) - 200 kg

NTSmart Tel.+86-20-89301818/28/38 CHINA nts@ntsmart.com
NTSmart Tel.+95-1-7534400 MYANMAR nts@ntsmyanmar.com.mm
NTSmart Tel.+66-2-8667474 THAILAND sales@ntsmart.co.th
NTSmart Tel.+255-22-2700674/75 TANZANIA ntstz@ntsmart.com

Ice Storage Bin

- Sturdy construction for side by side or stacked installation
- Non-corrosive bin liner for sanitary storage of ice
- Foam in place insulation in all bin walls for low melting rate
- Round edge for easy cleaning
- Door style:Upward opening
- Insulation:Polyurethane Foam





B-301SA
Code: 0300600991





B-501SA
Code: 0300600992





B-801SA
Code: 0300600993

Code	Storage capacity	Outside dimension(mm)	Accessories	NW	GW
0300600991	Approx: 118 kg/ Max 144 kg	558.8x820x1106 (1106-1136)	Scoop, leg (4 pcs)	37 kg	49 kg
0300600992	Approx: 173 kg/ Max 217 kg	762x820x1106 (1106-1136)	Scoop, leg (4 pcs)	47 kg	62 kg
0300600993	Approx: 286 kg/ Max 348kg	1220x820x1106 (1106-1136)	Scoop, leg (4 pcs)	64 kg	86 kg

Self-Contain Bin Cube Ice Maker

- Anti-dust mesh design,which is removable and easy for cleaning
- Water-flow design,which the ice capacity can be increased10% higher than other similar machines
- Push-up door style; compact machine size suitable for small space
- With high quality copper evaporator to ensure shorter ice freezing and saving time, more ice produciton.
- Using advanced noise reduciton technology to reduce noise more than 15%
- Overall food-grade PE inner liner, Obtained EU CE certification



25 kg
Code: 0300600654

40 kg
Code: 0300600655

60 kg
Code: 0300600657





100 kg
Code: 0300600660

Code	Dimension(mm)	Output	Voltage	Power	Compressor	Refrigrant	Storage bin Capacity	Cooling Type
0300600654	510x450x840	25kg/24hr	220V	260w	Embraco/Europe	R134a	20kg	Air Cooling
0300600655	510x450x840	40kg/24hr	220V	320w	Embraco/Europe	R134a	20kg	Air Cooling
0300600657	510x600x840	60kg /24 hr	220V	420w	Embraco/Brazil	R404a	27 kg	Air Cooling
0300600660	660x680x900	100 kg/24 hr	220V	750w	Secop/Germany	R404a	40kg	Air Cooling

Modular Cube Ice Maker

KITCHBOX

- LCD display controller
- Larger ice storage and high capacity with stainless steel material to meet higher ice consumption.
- Using industry-leading nickle plated copper evaporator to ensure shorter ice freezing and saving time, more ice produciton
- Using advanced noise reduciton technology to reduce noise more than 15%.
- Overall food-grade PE inner liner, Obtained EU CE certification.
- Water-flow design,which the ice capacity can be increased10% higher than other similar machines
- Cooling Type: Air Cooling
- The maximum output is on the conditions: Ambient temperature 21 ℃, Water temperature (12 ℃)

160 kg
Code: 0300600663

210 kg
Code: 0300600664

250 kg
Code: 0300600665

300 kg
Code: 0300600666

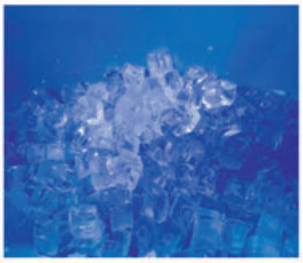



Code	Dimension(mm)	Output/24hr	Voltage	Power	Compressor	Refrigrant	Storage bin capacity
0300600663	570x890x1605	160kg/24 hr	220V	900w	Secop/Germany	R404a	140kg
0300600664	770x920x1620	210kg/24 hr	220V	1000w	Embraco/Brazil	R404a	200kg
0300600665	770x920x1620	250kg/24 hr	220V	1350w	Embraco/Brazil	R404a	200kg
0300600666	770x920x1620	300kg/24 hr	220V	1350w	Embraco/Brazil	R404a	200kg

Hood Type Dishwasher with Dispenser

- Material: AISI 304 for tank & wash chamber/ AISI 201 for outer panels
  Main wash module - construction: Double skin
  Main wash module - door : Double skin & insulated
  Wash pump type: dualflow
- Compact external dimensions
- The user interface is the acclaimed LED ProSmart, which provides simple and intuitive control of machine functions.

Dimension(mm)	W1150xD770xH1600
Mouth Dimension(mm)	W 540x H450
Rack Dimension(mm)	W500xD500
Main wash module(mm)	L 1150
Width of drying tunnel(mm)	600
Voltage	380 V/ 3 PH
Tank Capacity	70 Ltr
Boiler Capacity	17 Ltr
No of noozle on washarm	36 pcs
Type of Rinse	single rinse
Capacity racks/hr	200/ 100
Contact time sec	36/ 72
Wash temperature °C	55/ 55
Rinse water consumption lt/rack	1.4/ 2.8
Rinse temperature °C	82/ 82
Rinse water consumption lt/hr	280/ 280
Wash pumps total power(W)	1,500/ 1500
Total absorbed power	
• cold feed (15 °C)with heat recovery (W)	31,500/ 31500
• cold feed (15°C) (W)	41,000/ 41000
• hot feed (50 °C) (W)	28,500/ 28500

- Low water consumption, 1.2 or 1.3 or 1.4 Liters per Rack depending on Model.
- Program 1- High capacity/ Program 2- Prolong Contact
- On site machine direction can be changed.
- Options for Hot or cold water feed models
- Production capacity with 120/60 Baskets per Hour
- Can be supplied Dryer Zone as an option.
- Corner Dryer zone option available
- with mains water supply pressure (we recommend installing a pressure regulator with a pressure gauge, in cases where the supply pressure is not constantly equal to or greater than 2 bar)



Code: 0300800054

NTSmart Tel.+86-20-89301818/28/38 CHINA nts@ntsmart.com | NTSmart Tel.+95-1-7534400 MYANMAR nts@ntsmyanmar.com.mm | NTSmart Tel.+66-2-8667474 THAILAND sales@ntsmart.co.th | NTSmart Tel.+255-22-2700674/75 TANZANIA ntstz@ntsmart.com

- Double skin for lower body and single skin hood
- Small tank for energy saving & one-piece seamless tank
- Easy mechanical control with LED display
- 4 washing functions including 1 special washing function for glass
- Unique draining systems allow easy cleaning and cleaner washing water
- ProDose - detergent controlled system excluded

Undercounter Type Dishwasher- Without Chemical Dispenser

Dimension(mm)	W575x D605x H820
Tank / Boiler Capacity	20Ltr / 6Ltr
Maximum Dish Height	365mm
Rack Dimension(mm)	W500x D500
Power Consumption	6800W
Voltage	400V / 50Hz / 3N
Maximum Productivity	32Racks/Hr
Water Consumption/Cycle	2.7Ltr
Duration/Cycle	90 - 150Sec
Water Pressure	2 - 4Bar
Water Temperature	15°C-60°C



Code: 0300102732

Under Counter Glass Washer Without Dispenser

Dimension(mm)	W436x D535x H670
Tank / Boiler Capacity	8Ltr / 2.6Ltr
Maximum Dish Height	250mm
Rack Dimension(mm)	W400x D400
Power Consumption	3500W
Voltage	230V / 50Hz / 3N
Maximum Productivity	35Racks/Hr
Water Consumption/Cycle	2Ltr
Duration/Cycle	90 - 150Sec
Water Pressure	2 - 4Bar
Water Temperature	50°C-60°C



Code: 0300102771

Hood Type Dishwasher Without Dispenser

Dimension(mm)	W634x D744x H1529
Tank / Boiler Capacity	15Ltr / 6Ltr
Maximum Dish Height	440mm
Rack Dimension(mm)	W500x D500
Power Consumption	9600W
Voltage	400V / 50Hz / 3N
Maximum Productivity	60Racks/Hr
Water Consumption/Cycle	2.7Ltr
Duration/Cycle	90 - 150Sec
Water Pressure	2 - 4Bar
Water Temperature	15°C-60°



Code: 0300102772

Industrial Passthrough Dishwasher Machine

winterhalter

- Rinse aid dispenser: Inclusive
- Detergent dispenser: Inclusive
- Boiler Type : pressure boiler
- Rinse booster pump: Inclusive
- Clear colour-coded digital display
- 2 wash programmes
- Digital tank and boiler temperature display
- Error management system with pictograms and error logbook
- Thermostop controlled rinse temperature
- Automatic hood start
- Self-cleaning programme

Dimension(mm)	735x750x1480
Rack Dimension(mm)	500x500
Tank capacity	28 L
Capacity (Standard/High Temp)	60/20
Rinse water consumption (Std/ High Temp)	2.4/ 3.8
Electrical supply	380-415V/3ph~, 50Hz
Total Connected Load	11.8 kW
Washing Temperature (Std/ High Temp)	62/ 66 ° C
Rinsing Temperaure	85° C
Weight net / gross	98 / 123 kg
Standard rack	1 open rack, 1 plate rack & 1 cutlery insert



Code: 0300800105

Undercounter Dishwasher Machine For Commercial Use

winterhalter

- With the following optional features:
- Built-in detergent dosing pump with suction stick
- Built-in rinse aid dosing pump with suction stick
- Theoretical capacity: HighTemp complile (Rack capacity/hour: 20)

Machine Dimensions	600x603x820-855
Rack size(mm)	500x500
Three phase current	380-415V/3N~50 Hz
Optional	converting to 220V – 240V / 1N ~ 50 Hz
Total connected load	7,8 kW
Current limitation	16A
Rack capacity/hour	30/20
Fast speed program	60 racks/h (via parameter setting)
Entry height(mm)	404
NW	66/76kg
Rack package	Universal/plate/cutlery Closed base and rear cover, splash guard IPX3, Inlet & drain hoses



Code: 0300800106

NTSmart Tel.+86-20-89301818/28/38 CHINA nts@ntsmart.com
NTSmart Tel.+95-1-7534400 MYANMAR nts@ntsmyanmar.com.mm
NTSmart Tel.+66-2-8667474 THAILAND sales@ntsmart.co.th
NTSmart Tel.+255-22-2700674/75 TANZANIA ntstz@ntsmart.com

Hood Type Dishwasher

PRIMO

- The material is 304 stainless steel
- Third gear cleaning mode with touchable control panel
- Combined with heating , suitable for different water temperature;
- Easy handling, not only easy to clean, anti-clogging , but also operated smoothly.
- Big power wash water tank heater ensures meet the requirements for wash water termperature and have good effect for cleaning.
- Energy -washing chamber enclosed design, reduce the loss of heat and steam when opening the door to achieving energy-saving
- Sieved basket and sieved plate combination , easier to collect and cleaning.
- CE certification
- Uncovery dishwasher widely used in hotel and so on.
- Power: 380V / 50Hz / 3p (three-phase five-wire), cable Inlet diameter: 6 (ft); Drain diameter: 32mm Water pressure: 1.5 ~2ba

Dimensions(mm)	725x750x1522
Washing capacity(baskets/hour)	60/40/30
Water supply temperature	10-65°C
Water Hardness	0.034 ~ 0.103g / L
Power consumption(kw)	15.8
Cleaning pump power(kw)	0.75
Heating power washing(kw)	3
Spray heating power(kw)	12
Water consumption(liters/basket)	2.5
Water tank capacity(L)	26



Code: 0300102284

Undercounter Dishwasher

PRIMO

- 304 stainless steel material.
- Third gear cleaning mode
- 8 shaped concave attempts to prevent nozzle blocking.
- Stainless steel stretched spray arm, uniform operation smoothly, more hygienic.
- Switch lock, anti dry protection and multiple protection system.
- Touchable button, LED temperature display panel design.
- Power: 380V / 50Hz / 3p (three-phase five-wire), cable Inlet diameter: 6 (ft); Drain diameter: 32mm Water pressure: 1.5 ~2ba"

Dimension	600x600x800mm
Washing capacity	20-60backets/hour
Max. washing height	320mm
Washing heating power	1.7kw
Spray heating power	7.5kw
Cleaning pump power	0.37kw
Max. power consumption	9.6kw
Max. hourly water consumtion(rise)	168
Max. water consumption	2.5L/basket
Water volume	19
Cleaning termerature	55-65°C
Sprinkler temperature	85-90°C
Tableware basket	500x500mm





Code: 0100100383

Channel Type Dishwasher

PRIMO

- 304 Stainless steel material
- Assembled cleaning spray arm and nozzles, easy to disassemble and clean. Oval wash range, leaving cleaning without dead ends
- Large capacity of stainless steel sieved plate and large sieved basket can be removed for easy cleaning.
- Automatic water system, automatic temperature control system, automatic tank cleaning water power protection systems
- Automatically turn off when closing the outlet, convenient and practical
- CE certification
- Channel dishwasher widely used in hotels, restaurants, food street, staff canteens, etc., for 500 seats around the restaurant.
- Power: 380v/50hz/3p (three-phase five-v/ire system), drain diameter: 2 inch; Water pressure: 1.055kg/cm² ~ 1.76kg/cm²



Code: 0300102733



Code: 0300102734

Code	0300102733	0300102734
Size(mm)	1070x785x1520	1775x770x1865
Washing capacity	180(baskets/hour)	180(baskets/hour)
Heating mode	Electric	Electric
Water supply temerperature	10-50°C	10-50°C
Water hardness	0.034 ~ 0.103g/L	0.034 ~ 0.103g/L
Cleaning pump power	0.75kg	0.75kg
Spray heating power	36kW	36kW



NTSmart CHINA Tel.+86-20-89301818/28/38 nts@ntsmart.com
NTSmart MYANMAR Tel.+95-1-7534400 nts@ntsmyanmar.com.mm
NTSmart THAILAND Tel.+66-2-8667474 sales@ntsmart.co.th
NTSmart TANZANIA Tel.+255-22-2700674/75 ntstz@ntsmart.com

Sink Table -2 Bowls 2 Faucet Holes Without Back Splash And Drainer(4 legs)

- Adjustable legs
- Material: stainless steel 304
- Thickness: 1.05mm
- Leg tube diameter: Φ38mm
- Cross tube diameter: Φ25

Code: 0300701076

Code: 0300701077

Code: 0300701078



Code	Dimension(mm)	Packing size(mm)
0300701076	1100x762x850	1150x800x500
0300701077	1300x762x850	1350x800x500
0300701078	1500x762x850	1550x800x850

Sink Table -2 Bowls 2 Faucet Holes With Back Splash , Without Drainer(4 legs)

Code: 0300700691

Code: 0300701079

Code: 0300700692

Code: 0300701080

Code: 0300700693

Code: 0300700694



Code	Dimension(mm)	Packing size(mm)
0300700691	1100x762x(850+150)	1150x800x650
0300701079	1300x762x(850+150)	1350x800x650
0300700692	1500x762x(850+150)	1550x800x650
0300701080	1600x762x(850+150)	1650x800x650
0300700693	1700x762x(850+150)	1750x800x650
0300700694	1800x762x(850+150)	1850x800x650

Sink Table - 1 Faucet Hole +1 Bowl Without Back Splash And Drainer(4 legs)

- Material: 304 stainless steel
- Thickness: 1.05mm

Code: 0300700695

Code: 0300701081

Code: 0300701082



Code	Dimension(mm)	Packing size(mm)
0300700695	1100x762x850	1150x800x500
0300701081	1200x762x850	1250x800x500
0300701082	1500x762x850	1550x800x850

Sink Table - 1 Faucet Hole +2 Bowls Without Back Splash And Drainer(6 legs)



- Material: stainless steel 304
- Thickness: 1.05mm
- Leg tube diameter: Φ38mm
- Cross tube diameter: Φ25
- 6 adjustable legs without black splash, faucet and drainer

Code	Dimension(mm)	Packing size(mm)
0300700696	1600x762x850	1650x800x500
0300700697	1700x762x850	1750x800x500
0300700698	1800x762x850	1850x800x500
0300701094	2100x762x850	2150x800x500
0300700699	2200x762x850	2250x800x500
0600701083	2300x762x850	2350x800x500

Code: 0300700696

Code: 0300700697

Code: 0300700698

0300700698

Code: 0300701094

Code: 0300700699

Code: 0300701083

Sink Table - 1 Faucet Hole +1 Bowl Without Back Splash And Drainer(4 legs)

- adjustable legs
- Material: stainless steel 304
- Thickness: 1.05mm
- Leg tube diameter: Φ38mm
- Cross tube diameter: Φ25

Code: 0300700700

Code: 0300701084

Code: 0300701085



Code	Dimension(mm)	Packing size(mm)
0300700700	762x762x850	800x800x500
0300701084	900x762x850	950x800x500
0300701085	1000x762x850	1050x800x500

Sink Table - 1 Faucet Hole +1 Bowl +Back Splash Without Drainer(4 legs)

- adjustable legs
- Material: stainless steel 304
- Thickness: 1.05mm
- Leg tube diameter: Φ38mm
- Cross tube diameter: Φ25

Code: 0300701086

Code: 0300701087

Code: 0300700701



Code	Dimension(mm)	Packing size(mm)
0300701086	762x762x(850+150)	800x800x650
0300701087	900x762x(850+150)	950x800x650
0300700701	1000x762x(850+150)	1050x800x650

NTSmart Tel.+86-20-89301818/28/38 CHINA nts@ntsmart.com
NTSmart Tel.+95-1-7534400 MYANMAR nts@ntsmyanmar.com.mm
NTSmart Tel.+66-2-8667474 THAILAND sales@ntsmart.co.th
NTSmart Tel.+255-22-2700674/75 TANZANIA ntstz@ntsmart.com

Sink Table with Back Splash & Drainer Board 1 Faucet+1 Bowl

- adjustable legs
- Material: stainless steel 304
- Thickness: 1.05mm
- Leg tube diameter: Φ38mm
- Cross tube diameter: Φ25

Code: 0300701088

Code: 0300700702

Code: 0300700703

Code: 0300700704

Code	Dimension(mm)	Packing size(mm)
0300701088	1100x762x(850+150)	1150x800x650
0300700702	1200x762x850+150	1250x800x650
0300700703	1500x762x(850+150)	1550x800x650
0300700704	2300x762x(850+150)	2350x800x650



Work Table (4 legs)



- Material: stainless steel 304
- Thickness: 1.05mm
- Leg tube diameter: Φ38mm
- Cross tube diameter: Φ25mm
- 4 adjustable legs
- With support bar at the bottom of table top

Code: 0300700705

Code: 0300700706

Code: 0300700707

Code: 0300700708

Code: 0300700709

Code: 0300700710

Code	Dimension(mm)	Packing size(mm)
0300700705	762x762x850	800x800x70
0300700706	900x762x850	950x800x70
0300700707	1000x762x850	1050x800x70
0300700708	1100x762x850	1150x800x70
0300700709	1200x762x850	1250x800x70
0300700710	1500x762x850	1550x800x70

Work Table (6 legs)

Code: 0300700711

Code: 0300700712

Code: 0300700713

Code	Dimension(mm)	Packing size(mm)
0300700711	1600x762x850	1650x800x70
0300700712	2000x762x850	2050x800x70
0300700713	2300x762x850	2350x800x70



Work Table with Backsplash (4 legs)



- Material: stainless steel 304
- Thickness: 1.05mm
- Leg tube diameter: Φ38mm
- Cross tube diameter: Φ25mm
- 4 adjustable legs
- With support bar at the bottom of table top
- With backsplash

Code: 0300700714

Code: 0300700715

Code: 0300700716

Code: 0300700717

Code: 0300700718

Code: 0300700719

Code	Dimension(mm)	Packing size(mm)
0300700714	762x762x(850+150)	800x800x250
0300700715	900x762x(850+150)	950x800x250
0300700716	1000x762x(850+150)	1050x800x250
0300700717	1100x762x(850+150)	1150x800x250
0300700718	1200x762x(850+150)	1250x800x250
0300700719	1500x762x(850+150)	1550x800x250

Work Table with Backsplash (6 legs)

- Material: stainless steel 304
- Thickness: 1.05mm
- Leg tube diameter: Φ38mm
- Cross tube diameter: Φ25mm
- 6 adjustable legs
- With support bar at the bottom of table top
- With backsplash

Code: 0300700720

Code: 0300700721

Code: 0300700722



Code	Dimension(mm)	Packing size(mm)
0300700720	1600x762x(850+150)	1650x800x250
0300700721	2000x762x(850+150)	2050x800x250
0300700722	2300x762x(850+150)	2350x800x250

Work Table with Under Shelf (4 legs)



- Material: stainless steel 304
- Table top thickness: 1.05mm
- Shelf thickness: 0.9mm
- Leg tube diameter:Φ38mm
- 4 adjustable legs
- With support bar at the bottom of table top and shelf

Code: 0300700723

Code: 0300700724

Code: 0300700725

Code: 0300700726

Code: 0300700727

Code: 0300700728

Code	Dimension(mm)	Packing size(mm)
0300700723	762x762x850	800x800x110
0300700724	900x762x850	950x800x110
0300700725	1000x762x850	1050x800x110
0300700726	1100x762x850	1150x800x110
0300700727	1200x762x850	1250x800x110
0300700728	1500x762x850	1550x800x110

NTSmart Tel.+86-20-89301818/28/38 CHINA nts@ntsmart.com
NTSmart Tel.+95-1-7534400 MYANMAR nts@ntsmyanmar.com.mm
NTSmart Tel.+66-2-8667474 THAILAND sales@ntsmart.co.th
NTSmart Tel.+255-22-2700674/75 TANZANIA ntstz@ntsmart.com

Work Table with Under Shelf (6 legs)

- Material: stainless steel 304
- Table top thickness: 1.05mm
- Shelf thickness: 0.9mm
- Leg tube diameter: Φ38mm
- 6 adjustable legs
- With support bar at the bottom of table top and shelf

Code: 0300700729

Code: 0300700730

Code: 0300700731



Code	Dimension(mm)	Packing size(mm)
0300700729	1600x762x850	1650x800x110
0300700730	2000x762x850	2050x800x110
0300700731	2300x762x850	2350x800x110

Work Table with Backsplash and Under Shelf(4 legs)

- Material: stainless steel 304
- Table top thickness: 1.05mm
- Shelf thickness: 0.9mm
- Leg tube diameter: Φ38mm
- 4 adjustable legs
- With support bar at the bottom of table top
- With backsplash

Code: 0300700732

Code: 0300700733

Code: 0300700734

Code: 0300700735

Code: 0300700736

Code: 0300700737



Code	Dimension(mm)	Packing size(mm)
0300700732	762x762x(850+150)	800x800x250
0300700733	900x762x(850+150)	950x800x250
0300700734	1000x762x(850+150)	1050x800x250
0300700735	1100x762x(850+150)	1150x800x250
0300700736	1200x762x(850+150)	1250x800x250
0300700737	1500x762x(850+150)	1550x800x250

Work Table with Backsplash and Under Shelf(6 legs)

- Material: stainless steel 304
- Thickness: 1.05mm
- Leg tube diameter:Φ38mm
- Cross tube diameter: Φ25mm
- 6 adjustable legs
- With support bar at the bottom of table top
- With backsplash

Code: 0300700738

Code: 0300700739

Code: 0300700740



Code	Dimension(mm)	Packing size(mm)
0300700738	1600x762x(850+150)	1650x800x250
0300700739	2300x762x(850+150)	2050x800x250
0300700740	2000x762x(850+150)	2350x800x250

Work Table with Double Under Shelf (4 legs)

- Material: stainless steel 304
- Table top thickness: 1.05mm
- Shelf thickness: 0.9mm
- Leg tube diameter: Φ38mm
- 4 adjustable legs
- With support bar at the bottom of table top and shelf



Code: 0300700741

Code: 0300700742

Code: 0300700743

Code: 0300700744

Code: 0300700745

Code: 0300700746



Code	Dimension(mm)	Packing size(mm)
0300700741	762x762x850	800x800x130
0300700742	900x762x850	950x800x130
0300700743	1000x762x850	1050x800x130
0300700744	1100x762x850	1150x800x130
0300700745	1200x762x850	1250x800x130
0300700746	1500x762x850	1550x800x130

Work Table with Double Under Shelf (6 legs)

- Material: stainless steel 304
- Table top thickness: 1.05mm
- Shelf thickness: 0.9mm
- Leg tube diameter: Φ38mm
- 6 adjustable legs
- With support bar at the bottom of table top and shelf



Code: 0300700747

Code: 0300700748

Code: 0300700749

Code	Dimension(mm)	Packing size(mm)
0300700747	1600x762x850	1650x800x130
0300700748	2000x762x850	2050x800x130
0300700749	2300x762x850	2350x800x130

NTSmart CHINA Tel.+86-20-89301818/28/38 nts@ntsmart.com
NTSmart MYANMAR Tel.+95-1-7534400 nts@ntsmyanmar.com.mm
NTSmart THAILAND Tel.+66-2-8667474 sales@ntsmart.co.th
NTSmart TANZANIA Tel.+255-22-2700674/75 ntstz@ntsmart.com

Work Table With Double Under Shelf And Back Splash(4 legs)

- Material: stainless steel 304
- Table top thickness: 1.05mm
- Shelf thickness: 0.9mm
- Leg tube diameter: Φ38mm
- 4 adjustable legs
- With support bar at the bottom of table top and shelf
- With backsplash





Code: 0300700750

Code: 0300700751

Code: 0300700752

Code: 0300700753

Code: 0300700754

Code: 0300700755

Code	Dimension(mm)	Packing size(mm)
0300700750	762x762x(850+150)	800x800x300
0300700751	900x762x(850+150)	950x800x300
0300700752	1000x762x(850+150)	1050x800x300
0300700753	1100x762x(850+150)	1150x800x300
0300700754	1200x762x(850+150)	1250x800x300
0300700755	1500x762x(850+150)	1550x800x300

Work Table With Double Under Shelf And Back Splash(6 legs)

- Material: stainless steel 304
- Table top thickness: 1.05mm
- Shelf thickness: 0.9mm
- Leg tube diameter: Φ38mm
- 6 adjustable legs
- With support bar at the bottom of table top and shelf
- With backsplash



Code: 0300700756

Code: 0300700757

Code: 0300700758

Code	Dimension(mm)	Packing size(mm)
0300700756	1600x762x(850+150)	1650x800x300
0300700757	2000x762x(850+150)	2050x800x300
0300700758	2300x762x(850+150)	2350x800x300

Work Table with Drawer (4 legs)

- Material: stainless steel 304
- Table top thickness: 1.05mm
- Leg tube diameter: Φ38mm
- Cross tube diameter: Φ25mm
- 4 adjustable legs
- With drawer



Code: 0300700759

Code: 0300700760

Code: 0300700761

Code: 0300700762

Code: 0300700763

Code: 0300700764



Code	Dimension(mm)	Packing size(mm)
0300700759	762x762x850	800x800x300
0300700760	900x762x850	950x800x300
0300700761	1000x762x850	1050x800x300
0300700762	1100x762x850	1150x800x300
0300700763	1200x762x850	1250x800x300
0300700764	1500x762x850	1550x800x300

Work Table With 2 drawers (6 legs)

- Material: stainless steel 304
- Table top thickness: 1.05mm
- Leg tube diameter: Φ38mm
- Cross tube diameter: Φ25mm
- 6 adjustable legs
- With 2 drawers



Code: 0300700765

Code: 0300700766

Code: 0300700767

Code	Dimension(mm)	Packing size(mm)
0300700765	1600x762x850	1650x800x300
0300700766	2000x762x850	2050x800x300
0300700767	2300x762x850	2350x800x300

NTSmart CHINA Tel.+86-20-89301818/28/38 nts@ntsmart.com
NTSmart MYANMAR Tel.+95-1-7534400 nts@ntsmyanmar.com.mm
NTSmart THAILAND Tel.+66-2-8667474 sales@ntsmart.co.th
NTSmart TANZANIA Tel.+255-22-2700674/75 ntstz@ntsmart.com

Work Table with Backsplash and Drawer (4 legs)

- Material: stainless steel 304
- Table top thickness: 1.05mm
- Leg tube diameter: Φ38mm
- Cross tube diameter: Φ25mm
- 4 adjustable legs
- With backsplash and drawer





Code: 0300700768

Code: 0300700769

Code: 0300700770

Code: 0300700771

Code: 0300700772

Code: 0300700773

Code	Dimension(mm)	Packing size(mm)
0300700768	762x762x(850+150)	800x800x450
0300700769	900x762x(850+150)	950x800x450
0300700770	1000x762x(850+150)	1050x800x450
0300700771	1100x762x(850+150)	1150x800x450
0300700772	1200x762x(850+150)	1250x800x450
0300700773	1500x762x(850+150)	1550x800x450

Work Table With Backsplash And 2 Drawers(6 legs)

- Material: stainless steel 304
- Table top thickness: 1.05mm
- Leg tube diameter: Φ38mm
- Cross tube diameter: Φ25mm
- 6 adjustable legs
- With backsplash and 2 drawers



Code: 0300700774

Code: 0300700775

Code: 0300700776

Code	Dimension(mm)	Packing size(mm)
0300700774	1600x762x(850+150)	1650x800x450
0300700775	2000x762x(850+150)	2050x800x450
0300700776	2300x762x(850+150)	2350x800x450

Work Table with Under Shelf and Drawer (4 legs)

- Material: stainless steel 304
- Table top thickness: 1.05mm
- Shelf thickness: 0.9mm
- Leg tube diameter: Φ38mm
- 4 adjustable legs
- With support bar at the bottom of shelf and drawer



Code: 0300700777

Code: 0300700778

Code: 0300700779

Code: 0300700780

Code: 0300700781

Code: 0300700782



Code	Dimension(mm)	Packing size(mm)
0300700777	762x762x850	800x800x250
0300700778	900x762x850	950x800x250
0300700779	1000x762x850	1050x800x250
0300700780	1100x762x850	1150x800x250
0300700781	1200x762x850	1250x800x250
0300700782	1500x762x850	1550x800x250

Work Table with Under Shelf and 2 Drawers (6 legs)

- Material: stainless steel 304
- Table top thickness: 1.05mm
- Shelf thickness: 0.9mm
- Leg tube diameter: Φ38mm
- 6 adjustable legs
- With support bar at the bottom of shelf and 2 drawers

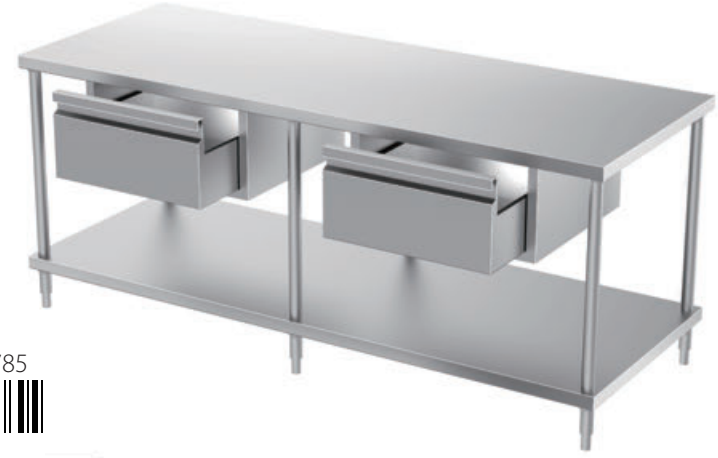

Code: 0300700783

Code: 0300700784

Code: 0300700785

Code	Dimension(mm)	Packing size(mm)
0300700783	1600x762x850	1650x800x250
0300700784	2000x762x850	2050x800x250
0300700785	2300x762x850	2350x800x250

NTSmart CHINA Tel.+86-20-89301818/28/38 nts@ntsmart.com
NTSmart MYANMAR Tel.+95-1-7534400 nts@ntsmyanmar.com.mm
NTSmart THAILAND Tel.+66-2-8667474 sales@ntsmart.co.th
NTSmart TANZANIA Tel.+255-22-2700674/75 ntstz@ntsmart.com

Work Table with Backsplash and Under Shelf and Drawer (4 legs)

- Material: stainless steel 304
- Table top thickness: 1.05mm
- Shelf thickness: 0.9mm
- Leg tube diameter: Φ38mm
- 4 adjustable legs
- With support bar at the bottom of shelf
- With blacksplash and drawer





Code: 0300700786

Code: 0300700787

Code: 0300700788

Code: 0300700789

Code: 0300700790

Code: 0300700791

Code	Dimension(mm)	Packing size(mm)
0300700786	762x762x(850+150)	800x800x250
0300700787	900x762x(850+150)	950x800x250
0300700788	1000x762x(850+150)	1050x800x250
0300700789	1100x762x(850+150)	1150x800x250
0300700790	1200x762x(850+150)	1250x800x250
0300700791	1500x762x(850+150)	1550x800x250

Work Table with Backsplash and Under Shelf and 2 drawers (6 legs)

- Material: stainless steel 304
- Table top thickness: 1.05mm
- Shelf thickness: 0.9mm
- Leg tube diameter: Φ38mm
- 6 adjustable legs
- With support bar at the bottom of shelf
- With blacksplash and 2 drawers



Code: 0300700792

Code: 0300700793

Code: 0300700794

Code	Dimension(mm)	Packing size(mm)
0300700792	1600x762x(850+150)	1650x800x250
0300700793	2000x762x(850+150)	2050x800x250
0300700794	2300x762x(850+150)	2350x800x250

4 Tiers Plain Shelf (4 legs)

- Material: stainless steel 304
- Table top thickness: 1.05mm
- Leg tube diameter: Φ38mm
- 4 adjustable legs
- With support bar at the bottom of each shelf



Code: 0300700795

Code: 0300700796

Code: 0300700797

Code	Dimension(mm)	Packing size(mm)
0300700795	1000x500x1500	1050x550x210
0300700796	1200x500x1500	1250x550x210
0300700797	1500x500x1500	1550x550x210

4 Tiers Plain Shelf (6 legs)

- Material: stainless steel 304
- Table top thickness: 1.05mm
- Leg tube diameter: Φ38mm
- 6 adjustable legs
- With support bar at the bottom of each shelf



Code: 0300700798

Code: 0300700799

Code: 0300700800

Code	Dimension(mm)	Packing size(mm)
0300700798	1600x500x1500	1650x550x210
0300700799	2000x500x1500	2050x550x210
0300700800	2300x500x1500	2350x550x210

Over High Shelf (4 legs)

- Material: stainless steel 304
- Table top thickness: 1.05mm
- Leg tube diameter: Φ38mm
- 4 adjustable legs
- With support bar at the bottom of each shelf



Code: 0300700801

Code: 0300700802

Code	Dimension(mm)	Packing size(mm)
0300700801	1000x350x(500+400)	1050x400x110
0300700802	1500x350x(500+400)	1550x400x110

NTSmart CHINA Tel.+86-20-89301818/28/38 nts@ntsmart.com
NTSmart MYANMAR Tel.+95-1-7534400 nts@ntsmyanmar.com.mm
NTSmart THAILAND Tel.+66-2-8667474 sales@ntsmart.co.th
NTSmart TANZANIA Tel.+255-22-2700674/75 ntstz@ntsmart.com

Over High Shelf (6 legs)

- Material: stainless steel 304
- Table top thickness: 1.05mm
- Leg tube diameter: Φ38mm
- 6 adjustable legs
- With support bar at the bottom of each shelf

Code: 0300700803

Code	Dimension(mm)	Packing size(mm)
0300700803	1600x350x(500+400)	1650x400x440
0300700804	2000x350x(500+400)	2050x400x110
0300700805	2300x350x(500+400)	2350x400x110

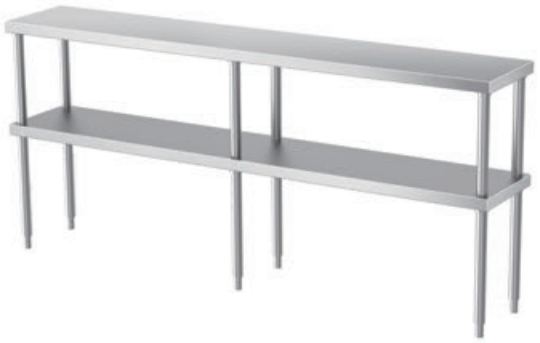

Code: 0300700804

Code: 0300700805

Over High Shelf (4 legs)

- Material: stainless steel 304
- Table top thickness: 0.9mm
- Leg tube diameter: Φ38mm
- 4 adjustable legs
- With support bar at the bottom of shelf

Code	Dimension(mm)	Packing size(mm)
0300700806	1000x350x(500+400)	1050x400x60
0300700807	1500x350x(500+400)	1550x400x60



Code: 0300700806

Code: 0300700807

Over High Shelf (6 legs)

- Material: stainless steel 304
- Table top thickness: 0.9mm
- Leg tube diameter: Φ38mm
- 6 adjustable legs
- With support bar at the bottom of shelf

Code: 0300700808

Code	Dimension(mm)	Packing size(mm)
0300700808	1600x350x(500+400)	1650x400x60
0300700809	2000x350x(500+400)	2050x400x60
0300700810	2300x350x(500+400)	2350x400x60



Code: 0300700809

Code: 0300700810

Storage Cabinet

- Size: 1200x500x1800mm
- Material: stainless steel 304
- Thickness: 0.73mm
- With support bar at the buttom of shelf
- With Gavity Pin

Code: 0300700811



Work Top Cabinet (4 legs)

- Material: stainless steel 304
- Table top thickness: 1.05mm
- Side plate thickness: 0.8mm
- Sliding door
- 4 adjustable gravity pin
- Without shelf
- With support bar at the bottom of top plate and bottom plate

Code: 0300700812



Code	Dimension(mm)	Packing size(mm)
0300700812	900x762x850	950x800x900
0300700813	1000x762x850	1050x800x900
0300700814	1100x762x850	1150x800x900
0300700815	1200x762x850	1250x800x900
0300700816	1500x762x850	1550x800x900

Code: 0300700813

Code: 0300700814

Code: 0300700815

Code: 0300700816

Work Top Cabinet (6 legs)

- Material: stainless steel 304
- Table top thickness: 1.05mm
- Side plate thickness: 0.8mm
- Sliding door
- adjustable gravity pin
- Without shelf
- With support bar at the bottom of top plate and bottom plate

Code: 0300700817



Code	Dimension(mm)	Packing size(mm)
0300700817	1600x762x850	1650x800x900
0300700818	2000x762x850	2050x800x900
0300700819	2300x762x850	2350x800x900

Code: 0300700818

Code: 0300700819

Work Top Cabinet with Backsplash (4 legs)

- Material: stainless steel 304
- Table top thickness: 1.05mm
- Side plate thickness: 0.8mm
- Sliding door
- 4 adjustable gravity pin
- Without shelf
- With support bar on the top plate and bottom plate
- With backsplash

Code: 0300700820



Code	Dimension(mm)	Packing size(mm)
0300700820	900x762x850	950x800x1010
0300700821	1000x762x850	1050x800x1010
0300700822	1100x762x850	1150x800x1010
0300700823	1200x762x850	1250x800x1010
0300700824	1500x762x850	1550x800x1010

Code: 0300700821

Code: 0300700822

Code: 0300700823

Code: 0300700824

NTSmart Tel.+86-20-89301818/28/38 CHINA nts@ntsmart.com | NTSmart Tel.+95-1-7534400 MYANMAR nts@ntsmyanmar.com.mm | NTSmart Tel.+66-2-8667474 THAILAND sales@ntsmart.co.th | NTSmart Tel.+255-22-2700674/75 TANZANIA ntstz@ntsmart.com

Work Top Cabinet with Backsplash (6 legs)

- Material: stainless steel 304
- Table top thickness: 1.05mm
- Side plate thickness: 0.8mm
- Sliding door
- 6 adjustable gravity pin
- Without shelf
- With support bar at the bottom of top plate and bottom plate
- With backsplash

Code: 0300700825



Code	Dimension(mm)	Packing size(mm)
0300700825	1600x762x850	1650x800x1010
0300700826	2000x762x850	2050x800x1010
0300700827	2300x762x850	2350x800x1010

Code: 0300700826

Code: 0300700827

Work Top Cabinet With Warm Plate Function(4 legs)

- With Warm Plate Function
- Material: stainless steel 304
- Table top thickness: 1.05mm
- Side plate thickness: 0.8mm
- Sliding door
- Adjustable gravity pin
- Without shelf
- With support bar at the bottom of top plate and bottom plate

Code: 0300300374



Code	Dimension(mm)	Packing size(mm)
0300300374	900x762x850	950x800x900
0300300375	1000x762x850	1050x800x900
0300300376	1100x762x850	1150x800x900
0300300377	1200x762x850	1250x800x900
0300300378	1500x762x850	1550x800x900

Code: 0300300375

Code: 0300300376

Code: 0300300377

Code: 0300300378

Work Top Cabinet With Warm Plate Function(6 legs)

- With Warm Plate Function
- Material: stainless steel 304
- Table top thickness: 1.05mm
- Side plate thickness: 0.8mm
- Sliding door
- Adjustable gravity pin
- Without shelf
- With support bar at the bottom of top plate and bottom plate

Code: 0300300379



Code	Dimension(mm)	Packing size(mm)
0300300379	1600x762x850	1650x800x900
0300700380	2000x762x850	2050x800x900
0300700381	2300x762x850	2350x800x900

Code: 0300300380

Code: 0300300381

Wall Shelf

- Material: stainless steel 304
- Thickness: 1.05mm

Code: 0300700881

Code	Dimension(mm)
0300700881	800x300x40
0300700882	1100x300x40
0300700883	1200x300x40



Code: 0300700882

Code: 0300700883

Open Wall Cabinet

- With support bar under the bottom
- Material: stainless steel 304
- Thickness: 0.63mm

Code: 0300700884

Code: 0300700885

Code	Dimension(mm)	Packing size(mm)
0300700884	750x400x600	800x450x650
0300700885	900x400x600	950x450x650
0300700886	1000x400x600	1050x450x650
0300700887	1100x400x600	1150x450x650
0300700888	1200x400x600	1250x450x650
0300700889	1500x400x600	1550x450x650

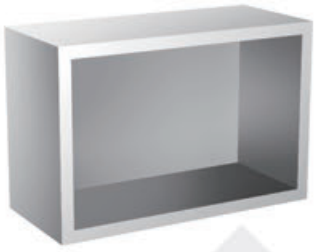

Code: 0300700886

Code: 0300700887

Code: 0300700888

Code: 0300700889

Code: 0300700890

Code: 0300700891

Code: 0300700892

Code	Dimension(mm)	Packing size(mm)
0300700890	1600x400x600	1650x450x650
0300700891	2000x400x600	2050x450x650
0300700892	2300x400x600	2350x450x650

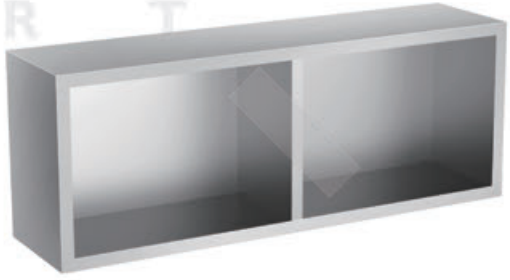

Open Wall Cabinet with Under Shelf

- With support bar under the bottom
- Material: stainless steel 304
- Thickness: 0.63mm

Code: 0300700893

Code: 0300700894

Code	Dimension(mm)	Packing size(mm)
0300700893	750x400x600	800x450x650
0300700894	900x400x600	950x450x650
0300700895	1000x400x600	1050x450x650
0300700896	1100x400x600	1150x450x650
0300700897	1200x400x600	1250x450x650
0300700898	1500x400x600	1550x450x650

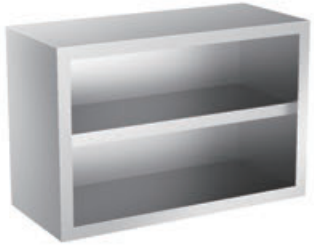

Code: 0300700895

Code: 0300700896

Code: 0300700897

Code: 0300700898

NTSmart CHINA Tel.+86-20-89301818/28/38 nts@ntsmart.com
NTSmart MYANMAR Tel.+95-1-7534400 nts@ntsmyanmar.com.mm
NTSmart THAILAND Tel.+66-2-8667474 sales@ntsmart.co.th
NTSmart TANZANIA Tel.+255-22-2700674/75 ntstz@ntsmart.com

Open Wall Cabinet with Under Shelf

- With support bar under the bottom
- Material: stainless steel 304
- Thickness: 0.63mm

Code: 0300700899

Code: 0300700900

Code: 0300700901

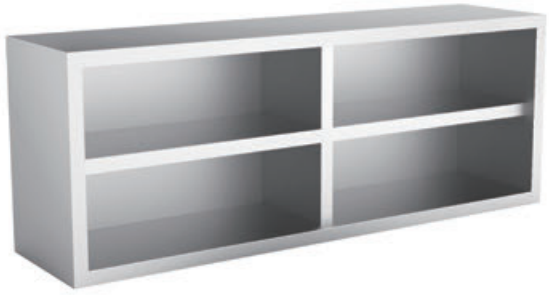

Code	Dimension(mm)	Packing size(mm)
0300700899	1600x400x600	1650x450x650
0300700900	2000x400x600	2050x450x650
0300700901	2300x400x600	2350x450x650

Open Wall Cabinet With Door

- With support bar under the bottom
- With push door
- Material: stainless steel 304
- Thickness: 0.63mm

Code: 0300700999

Code: 0300701000

Code: 0300701001

Code: 0300701002

Code: 0300701003

Code: 0300701004



Code	Dimension(mm)	Packing size(mm)
0300700999	750x400x600	800x450x650
0300701000	900x400x600	950x450x650
0300701001	1000x400x600	1050x450x650
0300701002	1100x400x600	1150x450x650
0300701003	1200x400x600	1250x450x650
0300701004	1500x400x600	1550x450x650

Code: 0300701005

Code: 0300701006

Code: 0300701007



Code	Dimension(mm)	Packing size(mm)
0300701005	1600x400x600	1650x450x650
0300701006	2000x400x600	2050x450x650
0300701007	2300x400x600	2350x450x650

Soiled Dish Table With sink And Dustbin Hole Without Drainer (4 legs)

- Material: stainless steel 304
- Table top thickness: 1.05mm
- Leg tube diameter:Φ38mm
- Cross tube diameter: Φ25mm
- Adjustable legs
- Size: 1500x762x(850+150)mm
- Packing: 1550x800x500mm

Code: 0300700828



Soiled Dish Table With Sink And Dustbin Hole Without Drainer (6 legs)

- Material: stainless steel 304
- Table top thickness: 1.05mm
- Leg tube diameter: Φ38mm
- Cross tube diameter: Φ25mm
- adjustable legs
- With suport bar at the bottom of table top

1 sink
Code: 0300700829

1 sink
Code: 0300700830

1 sink
Code: 0300700831



Code	Dimension(mm)	Packing size(mm)
0300700829	1600x762x(850+150)	1650x800x650
0300700830	2000x762x(850+150)	2050x800x500
0300700831	2300x762x(850+150)	2350x800x500
0300700832	2200x762x(850+150)	2250x800x500
0300700833	2300x762x(850+150)	2350x800x500

2 sink
Code: 0300700832

2 sink
Code: 0300700833

Clean Dish Table With Backsplash (4 legs)

- Material: stainless steel 304
- Table top thickness: 1.05mm
- Leg tube diameter: Φ38mm
- Cross tube diameter: Φ25mm
- 4 adjustable legs
- With suport bar at the bottom of table top
- With backsplash

Code: 0300700834



Code	Dimension(mm)	Packing size(mm)
0300700834	900x762x(850+150)	950x800x200
0300700835	1000x762x(850+150)	1050x800x200
0300700836	1100x762x(850+150)	1150x800x200
0300700837	1200x762x(850+150)	1250x800x200
0300700838	1500x762x(850+150)	1550x800x200

Code: 0300700835

Code: 0300700836

Code: 0300700837

Code: 0300700838

NTSmart Tel.+86-20-89301818/28/38 CHINA nts@ntsmart.com
NTSmart Tel.+95-1-7534400 MYANMAR nts@ntsmyanmar.com.mm
NTSmart Tel.+66-2-8667474 THAILAND sales@ntsmart.co.th
NTSmart Tel.+255-22-2700674/75 TANZANIA ntstz@ntsmart.com

Clean Dish Table With Backsplash (6 legs)

- Material: stainless steel 304
- Table top thickness: 1.05mm
- Leg tube diameter: Φ38mm
- Cross tube diameter: Φ25mm
- 6 adjustable legs
- With suport bar at the bottom of table top



Code: 0300700839

Code	Dimension(mm)	Packing size(mm)
0300700839	1600x762x(850+150)	1650x800x200
0300700840	2000x762x(850+150)	2050x800x200
0300700841	2300x762x(850+150)	2350x800x200

Code: 0300700840

Code: 0300700841

Clean Dish Table With Under Shelf With Backsplash (4 legs)

- Material: stainless steel 304
- Table top thickness: 1.05mm
- Leg tube diameter: Φ38mm
- Adjustable legs
- With suport bar at the bottom of table top



Code: 0300700842

Code: 0300700843

Code: 0300700844

Code	Dimension(mm)	Packing size(mm)
0300700842	900x762x(850+150)	950x800x200
0300700843	1000x762x(850+150)	1050x800x200
0300700844	1100x762x(850+150)	1150x800x200
0300700845	1200x762x(850+150)	1250x800x200
0300700846	1500x762x(850+150)	1550x800x200

Code: 0300700845

Code: 0300700846

Clean Dish Table With Under Shelf With Backsplash (6 legs)

- Material: stainless steel 304
- Table top thickness: 1.05mm
- Leg tube diameter: Φ38mm
- 6 adjustable legs
- With suport bar at the bottom of table top



Code: 0300700847

Code	Dimension(mm)	Packing size(mm)
0300700847	1600x762x(850+150)	1650x800x200
0300700848	2000x762x(850+150)	2050x800x200
0300700849	2300x762x(850+150)	2350x800x200

Code: 0300700848

Code: 0300700849

Hand Sink

• Material: stainless steel 304



Code: 0300700850

Code: 0300700851

Code: 0300700852

Code: 0300700853

Code	Dimension(mm)	Bowl size(mm)	Thickness
0300700850	418x405x320	302x252	0.9mm
0300700851	380x280x290	375x203	0.9mm
0300700852	418x405x320	375x260	0.9mm
0300700853	440x388x331	360x257	0.9mm



Code: 0300700855

Code: 0300700854

Code: 0300700856



Code: 0300700857

Code	Dimension(mm)	Bowl size(mm)	Thickness
0300700854	455x455x320	375x317x170	Top 1.0mm + bowl 0.8mm
0300700855	460x470x320	375x317x170	Top 1.0mm + bowl 0.8mm
0300700856	455x455x200	375x317x170	Top 1.0mm + bowl 0.8mm
0300700857	400x325x180	360x260x150	1.0mm









Code: 0300700858

Code: 0300700052

Code: 0300700859

Code: 0300700860

Code	Dimension(mm)	Bowl size(mm)	Thickness
0300700858	360x360x170	300x300x140	1.0mm
0300700052	360x360x150	300x300x140	1.0mm
0300700859	500x405x160	430x270	0.8mm
0300700860	500x405x210	430x270	0.8mm



Code: 0300700861



Code: 0300700149

Code	Dimension(mm)	Bowl size(mm)	Thickness
0300700861	500x405x210	430x270	0.8mm
0300700149	515x460x270	430x270	0.8mm

NTSmart Tel.+86-20-89301818/28/38 CHINA nts@ntsmart.com
NTSmart Tel.+95-1-7534400 MYANMAR nts@ntsmyanmar.com.mm
NTSmart Tel.+66-2-8667474 THAILAND sales@ntsmart.co.th
NTSmart Tel.+255-22-2700674/75 TANZANIA ntstz@ntsmart.com

Knee Operated Hand Sink

• With drainer, tap and petal sets



Code: 0300700652



Code: 0300700862



Code: 0300700863

Code	Dimension(mm)	Thickness
0300700652	400x340x555	0.9mm
0300700862	340x400x560	0.9mm
0300700863	450x470x400	0.9mm

Hand Sink

• Material:stainless steel 304



Code: 0300701091



Code: 0300700865



Code: 0300700866



Code: 0300700867



Code: 0300700868



Code: 0300700869



Code: 0300700870



Code: 0300700871

Code	Dimension(mm)	Bowl size(mm)	Thickness
0300701091	390x400x148	Φ300x60	1.5mm
0300700865	420x420x240	Φ365x160	1.2mm
0300700866	470x470x127	Φ385x113	1.0mm
0300700867	550x420x161	442x310	1.2mm
0300700868	532x432x165	533x433x165	1.2mm
0300700869	600x400x120		1.2mm
0300700870	445x395x115		1.2mm
0300700871	605x440x154		1.2mm

Hand Sink

• Material:stainless steel 304



Code: 0300700872



Code: 0300700873



Code: 0300700874

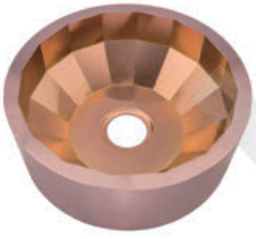

Code: 0300700875



Code: 0300700876



Code: 0300700038



Code: 0300700877



Code: 0300700878



Code: 0300700879



Code: 0300700880

Code	Dimension(mm)	Bowl size	Thickness
0300700872	600x425x115		1.2mm
0300700873	610x597x75		1.2mm
0300700874	464x365x175		1.2mm
0300700875	Φ476x175		1.2mm
0300700876	610x473x235		1.2mm
0300700038	560x420x150	480x300x150	1.2mm
0300700877	Φ300x100		1.2mm
0300700878	1200x550x200		1.2mm
0300700879	Φ472x864	Φ404x161	1.2mm
0300700880	533x381x153	483x331x153	1.2mm

NTSmart Tel.+86-20-89301818/28/38 CHINA nts@ntsmart.com
NTSmart Tel.+95-1-7534400 MYANMAR nts@ntsmyanmar.com.mm
NTSmart Tel.+66-2-8667474 THAILAND sales@ntsmart.co.th
NTSmart Tel.+255-22-2700674/75 TANZANIA ntstz@ntsmart.com

Normal type Exhaust hood

- Easy to clean. Low cost for maintenance.
- Save installation space. can avoid floor height limit problem.
- Stactic device can be used for purify the smoke.
- No consumable parts. no need to replace consumable part in the daily use.
- Customized product, price is based on per meter.



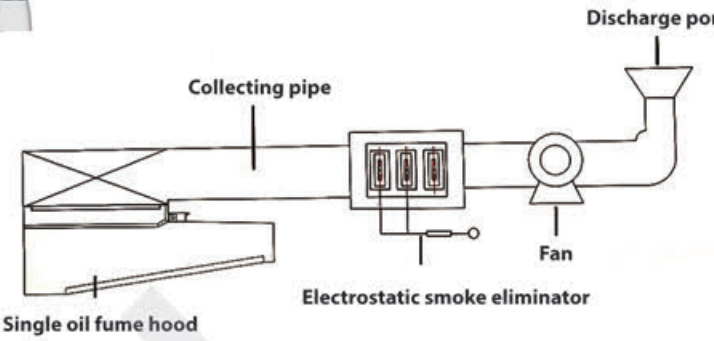

Code: 0300800078

Code: 0300800079

Code: 0300800080

Code: 0300800081

Code	Width	Voltage	Material	Self-clean	Blower
0300800078	1200mm	220v	201 stainless steel	NO	NO
0300800079	1200mm	220v	201 stainless steel	Yes	NO
0300800080	1200mm	220v	201 stainless steel	NO	1.25kw
0300800081	1200mm	220v	201 stainless steel	Yes	1.25kw

Built-in Electric Static Exhaust Hood

- Save space with unique 2 in 1 style exhaust hood and purify device. Collect sump oil with degrease technology.
- Electrostatic device build-in to save equipment cost and space. the mini kitchen height can be 2.95meters.
- Prevent damage from flame and oil-smoke with extra high temperature isolation zone.
- Electric staic device working steadily.
- 90% purify efficiency high frequemcy, the oil accumulate in the pipeline can be decreased a lot to keep the whole purify system safer at the same time.
- Purify the odor.O3 will be generated when purify the oil-smoke to neutralize most kitchen smells inside the pipeline.
- Customized product, price is based on per meter.



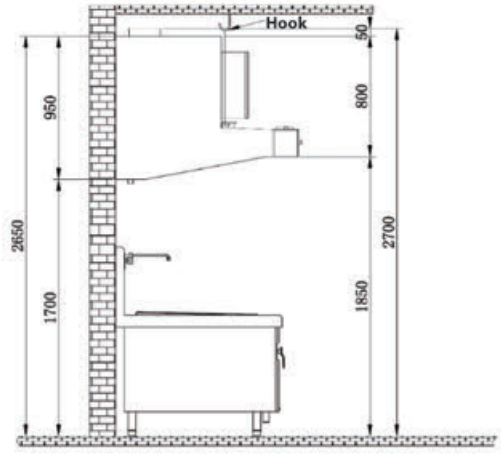

Code: 0300800066

Code: 0300800067

Code: 0300800069

Code: 0300800071

Code	Purifing rate	Width	Voltage	Material	Self-clean	Blower
0300800066	k9 (92%)	1200mm	220v	201 stainless steel	NO	NO
0300800067	k9 (92%)	1200mm	220v	201 stainless steel	YES	NO
0300800069	k9 (92%)	1200mm	220v / 380v	201 stainless steel	NO	1.25kw
0300800071	k9 (92%)	1200mm	220v / 380v	201 stainless steel	YES	1.25kw

Filter type Exhaust Hood

- High efficiency
- Build-in new oil&smoke purification unit, adopt double layer filting technology.
- Double layer oil & smoke purification, effective and long lasting, unique design, easy to clean and Maintenance.
- Easy and stable operation.
- Hign efficiency filter, purifying rate up to 99%.
- Customized product, price is based on per meter.



Code: 0300800074

Code: 0300800075

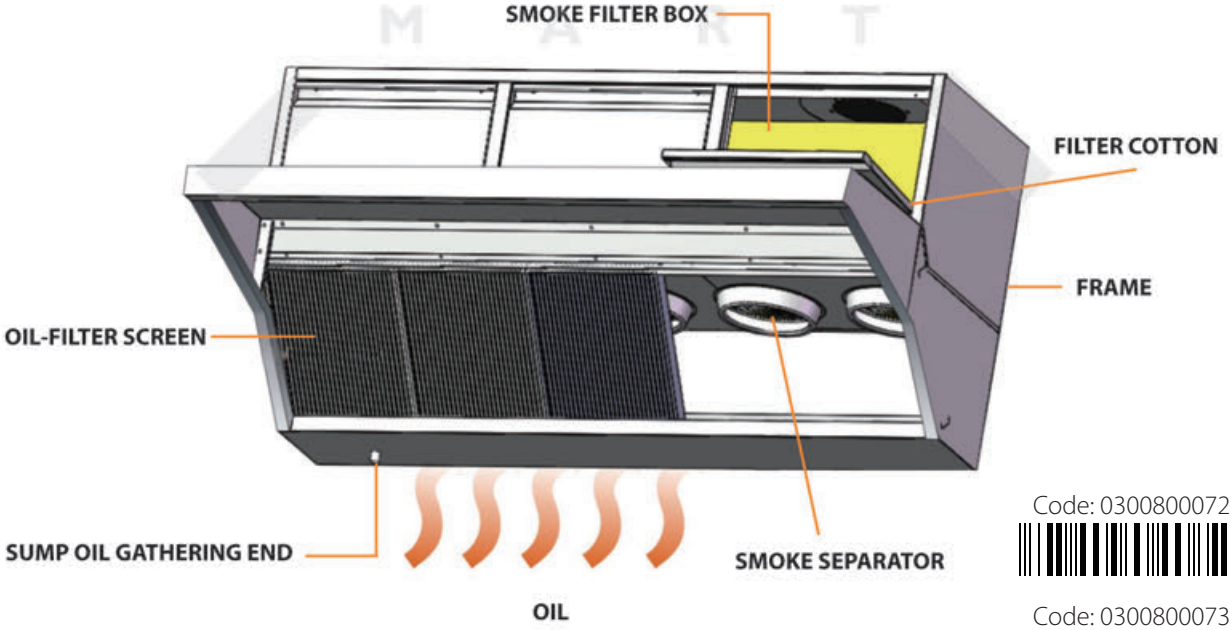

Code: 0300800072

Code: 0300800073

Code	Width	Voltage	Material	Self-clean	Blower
0300800072	1200mm	220v	201 stainless steel	NO	NO
0300800073	1200mm	220v	201 stainless steel	YES	NO
0300800074	1200mm	380v	201 stainless steel	NO	2.8kw
0300800075	1200mm	380v	201 stainless steel	YES	2.8kw

NTSmart Tel.+86-20-89301818/28/38 CHINA nts@ntsmart.com
NTSmart Tel.+95-1-7534400 MYANMAR nts@ntsmyanmar.com.mm
NTSmart Tel.+66-2-8667474 THAILAND sales@ntsmart.co.th
NTSmart Tel.+255-22-2700674/75 TANZANIA ntstz@ntsmart.com

Island type Exhaust Hood

- Recycle sump oil efficiently.
- Build-in new oil & smoke purification unit, adopt double layer filting technology.
- Easy to clean. Low cost for maintenance.
- Easy to operate. work performance is steady and reliable
- Customized product, price is based on per meter.



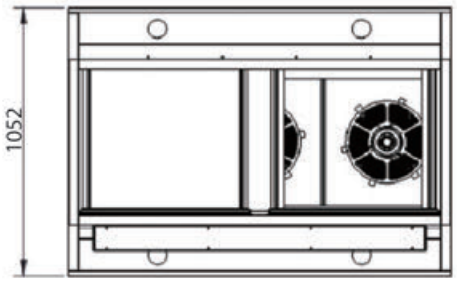

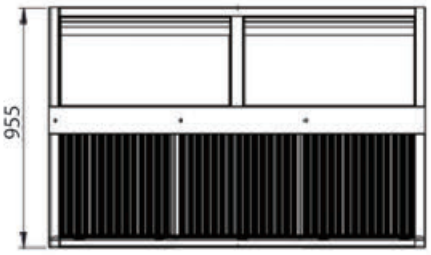

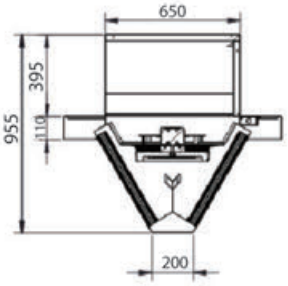

Code: 0300800076

Code: 0300800077

Code	Width	Voltage	Material	Self-clean	Blower
0300800076	1200mm	220v	201 stainless steel	NO	NO
0300800077	1200mm	220v	201 stainless steel	YES	NO

NTSmart Tel.+86-20-89301818/28/38 CHINA nts@ntsmart.com
NTSmart Tel.+95-1-7534400 MYANMAR nts@ntsmyanmar.com.mm
NTSmart Tel.+66-2-8667474 THAILAND sales@ntsmart.co.th
NTSmart Tel.+255-22-2700674/75 TANZANIA ntstz@ntsmart.com

Island type Exhaust Hood

- Recycle sump oil efficiently.
- Easy to clean. Low cost for maintenance.
- Easy to operate. work performance is steady and reliable
- Customized product, price is based on per meter.



Code: 0300800082

Code: 0300800083

Code: 0300800084

Code: 0300800085

Code	Width	Voltage	Blower	Self-clean	Material
0300800082	1200mm	220v	NO	NO	201 stainless steel
0300800083	1200mm	220v	NO	YES	201 stainless steel
0300800084	1000mm	220v	1.25kw	NO	201 stainless steel
0300800085	1000mm	220v	1.25kw	Yes	201 stainless steel

Vent Wash Exhaust Hood

- Spray header : processed by 1 inches Galvanized pipe.
  One sprayer be installed every 20cm distance.
- Exhaust hood top light be installed each meter.
- Customized product, price is based on per meter.



Code: 0300800103

Code	Size(mm)	Material	Main panel thickness	Water tank thickness
0300800103	2200x1300x700	304 stainless steel	1.2mm	1.0mm

NTSmart Tel.+86-20-89301818/28/38 CHINA nts@ntsmart.com
NTSmart Tel.+95-1-7534400 MYANMAR nts@ntsmyanmar.com.mm
NTSmart Tel.+66-2-8667474 THAILAND sales@ntsmart.co.th
NTSmart Tel.+255-22-2700674/75 TANZANIA ntstz@ntsmart.com

Pan Rack Trolley

- 201 stainless steel,Board is full 0.7mm, round tube :25.4x25.4x0.85mm.
- 4" TPR gray wheel with two break.
- Board surface is sanding.And the pan is stretching.

Stainless Steel Three-layers Dining Cart



Code: 0301000268
Size: 860×540×940mm

Code: 0300203099
Size: 810×460×850mm

Stainless Steel Two-layers Dining Cart



Code: 0301200829
Size:860×540×940mm

Code: 0301200830
Size:810×460×850mm

Stainless Steel Drinking Cart

- 201 stainless steel,Board real thickness is 0.6mm,
- Square tube :25.4x25.4x0.85mm, 5" blue wheel with two break.
- Board surface is polishing.And the pan is stretching.steel wire is Dia130 mm



Code: 0301000223
Size:950×500×950mm

Code: 0301000224
Size:850x450x900mm

Code: 0301000225
Size:750x400x835mm

Stainless Steel Four-layers Hotpot Trolley

- 201 stainless steel, round tube is Dia 19mm,board is 0.5mm, every layer distance is 173mm,
- 2.5" wheels with two break, the finish is polishing



Code: 0301201166
Size:480×320×790mm

Stainless Steel Single-Line Cake Cart

- Stainless steel 201, "L" style board is 1.0mm,5" TPR wheel with two break,every layer distance is 80mm.

Code: 0301000236

Code: 0301000238

Code: 0301000237

Code: 0300203089

Code	Dimension(mm)	Cake Pan
0301000236	470x620x1000	600x400(6 pans)
0301000237	470x620x1735	600x400(15 pans)
0301000238	470x620x1735	600x400(16 pans)
0300203089	515x665x1735	American pan (463x660)



Stainless Steel Double-Container Cake Cart

- Stainless steel 201, "L" style board is 1.0mm,5" TPR wheel with two break,every layer distance is 80mm.

Code: 0300203090

Code: 0300203091

Code: 0300203092

Code	Dimension(mm)	Pans
0300203090	670x820x1000	12 pans
0300203091	670x820x1735	30 pans
0300203092	670x820x1735	32 pans



GN Pan Trolley SS

- Stainless steel 201, "M"style board is 0.8mm,5" wheels with two break,every layer distance is 80mm.

Code: 0301000229

Code: 0301000230

Code: 0301000232

Code: 0301000233

Code: 0301000234

Code	Dimension(mm)	Capacity
0301000229	380x550x1000	1/1GN (6 pans)
0301000230	590x670x1000	2/1GN (6 pans)
0300100232	380x550x1735	1/1GN (15 pans)
0300100233	380x550x1735	1/1GN (6 pans)
0300100234	590x670x1735	2/1 GN (15 pans)



NTSmart CHINA Tel.+86-20-89301818/28/38 nts@ntsmart.com
NTSmart MYANMAR Tel.+95-1-7534400 nts@ntsmyanmar.com.mm
NTSmart THAILAND Tel.+66-2-8667474 sales@ntsmart.co.th
NTSmart TANZANIA Tel.+255-22-2700674/75 ntstz@ntsmart.com

GN Pan Trolley SS

- Stainless steel 201, "M"style board is 0.8mm,5" TPR wheels with two break,every layer distance is 80mm.



Code: 0301000231

Code: 0301000235

Code: 0300203088

Code	Dimension(mm)	Capacity
0301000231	740x550x1000	1/1GN (6 pans)
0301000235	550×740×1740	1/1 GN (15x2 pans)
0300203088	550×740×1740	1/1 GN (16x2 pans)

Stainless Steel Flat Truck - Folding style



Stainless Steel Flat Truck - Removable style



Code: 0300203093

Code: 0300203094

Code: 0300203096

Code: 0300203098

Code	Size(mm)	Shape	Material	Thickness of board
0300203093	740×480×870	Standard shape	S/S 201	1.2mm
0300203094	900×600×900	Extra heavy shape	S/S 201	1.2mm
0300203096	900×550×870	Extra heavy shape	S/S 201	1.5mm
0300203098	1000×600×870	Extra heavy shape	S/S 201	1.5mm

Dinner Plate Collecting Cart



Code: 0301000070

Size: 80×44×93cm



Pre Rinse Unit - Deck Mounted Type

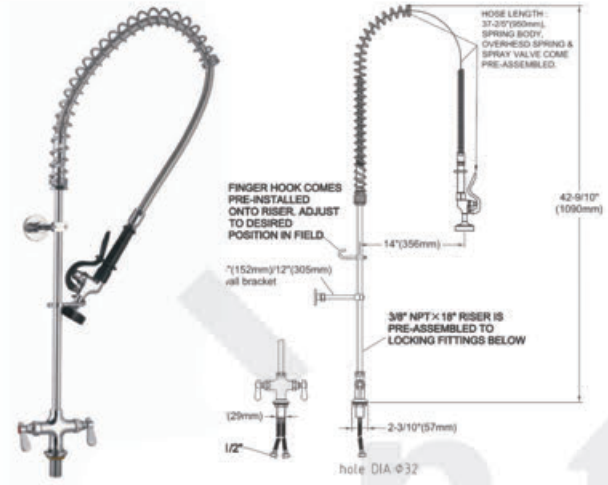

- Brass cartridge
- Stainless steel and brass construction
- Strong construction for heavy duty use
- Ideal for food service, commercial kitchens, restaurants and hotel applications
- Spray valve
- Easy for installation
- The product includes check valve to prevent cross-flow
- The spray valve conforms to ANSI/ASTM F2324-03

- Deck Mounted type,
- Heavy Duty construction,
- 20" (510 mm) riser,
- 1118mm flexible S.S hose,
- spary valve, 6" (152mm) or 7" (305mm) wall bracket,
- Includes check valve to prevent cross-flow,
- Conforms to ANSI/ASTM F2324-03

Code: 0600600512

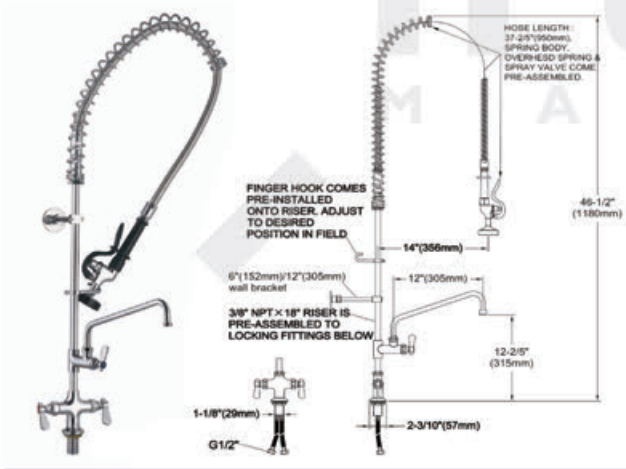

- Deck mounted type
- Heavy duty construction
- 20" (510mm) rinser
- 44" (1188mm) flexible stainless steel hose
- Spra valve
- 12" (305mm) wall bracket
- Add on faucet 12" (305mm)
- 1.24GPM for spray valve,2.2GPM for nozzle

Code: 0600600527

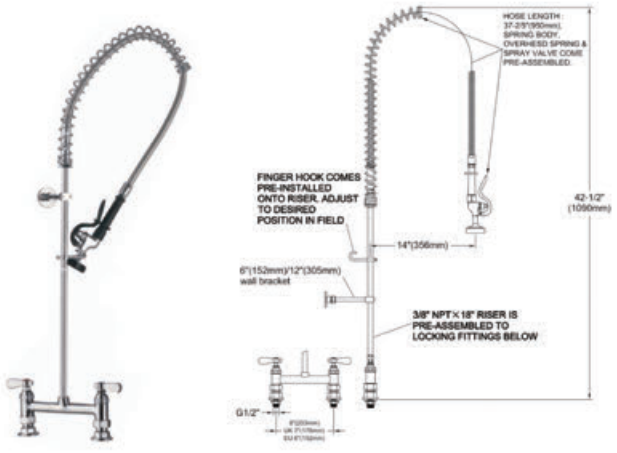

- 8"(203mm)Center Deck mounted type
- Heavy duty construction
- 20" (510mm) riser
- 44" (1188mm) flexible stainless steel hose,
- Spray valve
- 6"(152)or 12"(305mm)Wall bracket
- The product includes check valve to prevent cross-flow
- The spray valve conforms to ANSI/ASTM F2324-03
- Ideal For food service, commercial kitchens, restaurants and hotel applications

Code: 0600600517

NTSmart CHINA Tel.+86-20-89301818/28/38 nts@ntsmart.com
NTSmart MYANMAR Tel.+95-1-7534400 nts@ntsmyanmar.com.mm
NTSmart THAILAND Tel.+66-2-8667474 sales@ntsmart.co.th
NTSmart TANZANIA Tel.+255-22-2700674/75 ntstz@ntsmart.com

Pre Rinse Unit - Deck Mounted Type



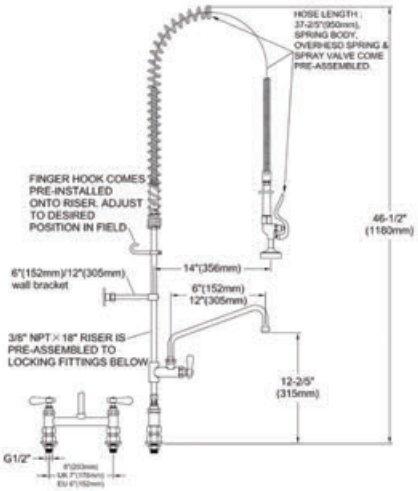

- 8"(203mm) center Deck mounted type
- Heavy duty construction
- 20" (510mm) riser
- 44"(1188mm) flexible stainless steel hose
- Spray valve
- 6"(152)or 12"(305mm)Wall bracket
- The product includes check valve to prevent cross-flow
- Add on faucet, Swing nozzle with 12"(305mm)length
- The spray valve conforms to ANSI/ASTM F2324-03
- Ideal For food service, commercial kitchens, restaurants and hotel applications

Code: 0600600542

Pre-Rinse Unit Wall Mounted Type



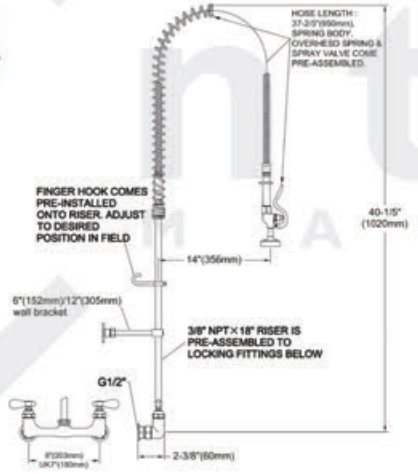

- 8"(203mm)Center wall mounted type
- Heavy duty construction
- 20" (510mm) riser
- 44" (1188mm) flexible stainless steel hose,
- Spray valve
- 6"(152)or 12"(305mm)Wall bracket
- The product includes check valve to prevent cross-flow
- The spray valve conforms to ANSI/ASTM F2324-03
- Ideal For food service, commercial kitchens, restaurants and hotel applications

Code: 0300102212



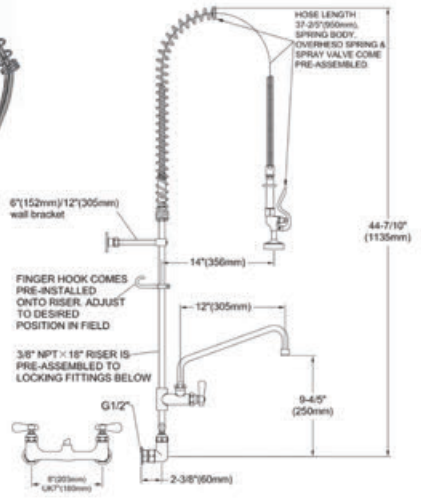

- 8"(203mm) center wall mounted type
- Heavy duty construction
- 20" (510mm) riser
- 44"(1188mm) flexible stainless steel hose,
- Spray valve
- 6"(152)or 12"(305mm)Wall bracket
- The product includes check valve to prevent cross-flow
- Add on faucet, Swing nozzle with 12"(305mm)length
- The spray valve conforms to ANSI/ASTM F2324-03
- Ideal For food service, commercial kitchens, restaurants and hotel applications

Code: 0600600550

Deck Mixing Faucet Hot & Cold

- Deck mounted Pantry faucet
- Lever handles
- 8" (203mm) centers
- 1/2" NPT eccentric flanged female inlets
- The product includes check valve to prevent cross-flow



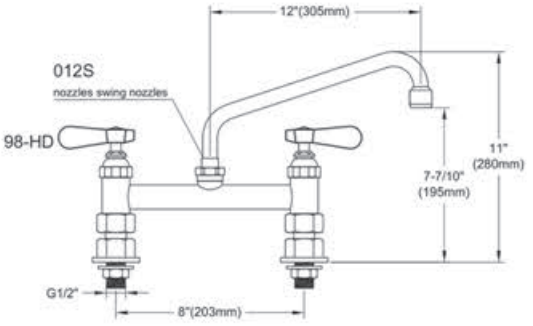

Code: 0300700962	Code: 0300700902	Code: 0600600510	Code: 0300700903
Nozzle length: 8" (203 mm)	Nozzle length: 10" (254 mm)	Nozzle length: 12" (305 mm)	Nozzle length: 14" (356 mm)

Deck Mixing Faucet - Hot & Cold

- Deck mounted Pantry faucet
- Lever handles
- 4" (102mm) centers
- 1/2" NPT eccentric flanged female inlets
- The product includes check valve to prevent cross-flow



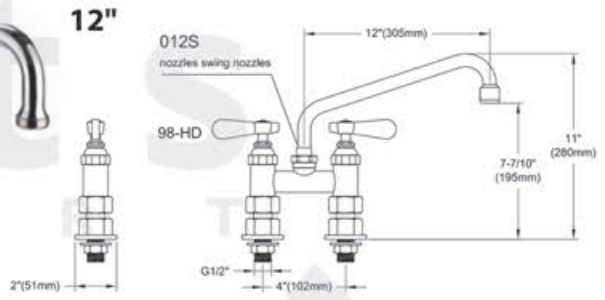

Code: 0300700904	Code: 0300700905	Code: 0600600509	Code: 0300700906
Nozzle length: 8" (203 mm)	Nozzle length: 10" (254 mm)	Nozzle length: 12" (305 mm)	Nozzle length: 14" (356 mm)

Swivel Base Faucet - Hot & Cold

- Deck mounted Pantry faucet
- Lever handles
- Single hole
- 1/2" NPSM female inlets
- The product includes check valve to prevent cross-flow



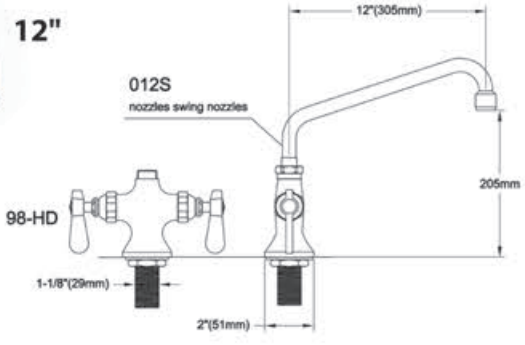

Code: 0300700907	Code: 0600600529	Code: 0600600508	Code: 0300700908
Nozzle length: 8" (203 mm)	Nozzle length: 10" (254 mm)	Nozzle length: 12" (305 mm)	Nozzle length: 14" (356 mm)

NTSmart CHINA Tel.+86-20-89301818/28/38 nts@ntsmart.com
NTSmart MYANMAR Tel.+95-1-7534400 nts@ntsmyanmar.com.mm
NTSmart THAILAND Tel.+66-2-8667474 sales@ntsmart.co.th
NTSmart TANZANIA Tel.+255-22-2700674/75 ntstz@ntsmart.com

Swivel Base Faucet - Cold Only

- Deck mounted Pantry faucet
- Lever handle
- 1/2" NPSM male shank
- 1/4" NPT union type tailpiece
- The product includes check valve to prevent cross-flow



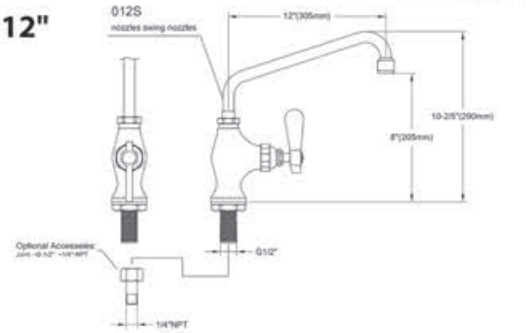

Code: 0300700909	Code: 0600600533	Code: 0600600551	Code: 0300700910
Nozzle length: 8" (203 mm)	Nozzle length: 10" (254 mm)	Nozzle length: 12" (305 mm)	Nozzle length: 14" (356 mm)

Wall Mounted Pantry Faucet - Hot & Cold

- Wall mounted Pantry faucet
- Lever handles
- 8" (203 mm) center
- 1/2" NPT eccentric flanged female inlets
- The product includes check valve to prevent cross-flow



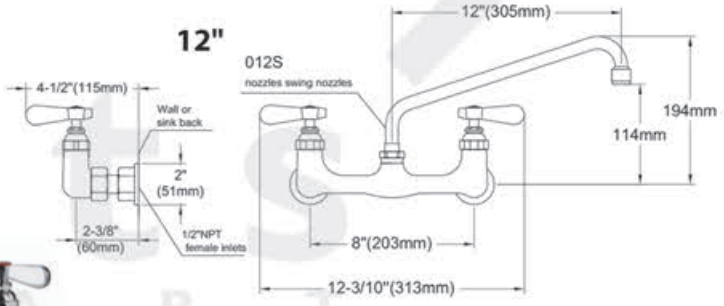

Code: 0300700911	Code: 0300700912	Code: 0600600511	Code: 0300700913
Nozzle length: 8" (203 mm)	Nozzle length: 10" (254 mm)	Nozzle length: 12" (305 mm)	Nozzle length: 14" (356 mm)

Wall Mounted Pantry Faucet - Cold only

- Wall mounted Pantry faucet
- Lever handles
- 8" (203 mm) center
- 1/2" NPT eccentric flanged female inlets
- The product includes check valve to prevent cross-flow



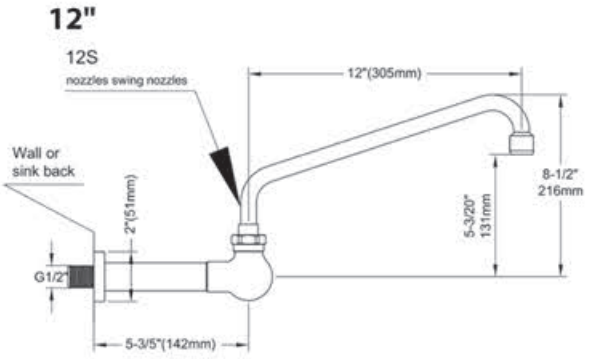

Code: 0300700914	Code: 0300700915	Code: 0300102300	Code: 0300700916
Nozzle length: 8" (203 mm)	Nozzle length: 10" (254 mm)	Nozzle length: 12" (305 mm)	Nozzle length: 14" (356 mm)

Deck Mixing Faucet - Hot & Cold

- Deck mounted Pantry faucet
- Lever handles
- 8" (203mm) centers
- 1/2" NPT eccentric flanged female inlets
- The product includes check valve to prevent cross-flow

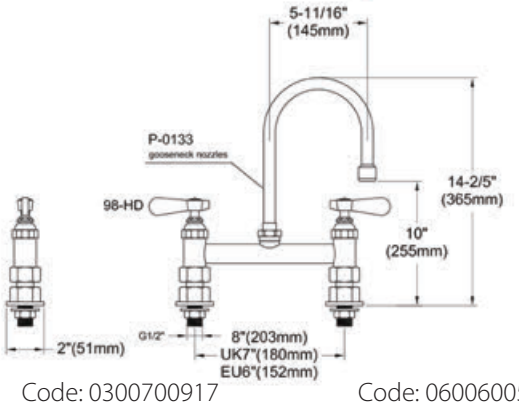

145mm



Code: 0600600555	Code: 0300700917	Code: 0600600526
Nozzle length: 5-11/16" (145 mm)	Nozzle length: 7-3/4" (192 mm)	Nozzle length: 8-3/4" (223 mm)

Wall Mounted Pantry Faucet - Hot & Cold

- Wall mounted Pantry faucet
- Lever handles
- 8" (203 mm) center
- 1/2" NPT eccentric flanged female inlets
- The product includes check valve to prevent cross-flow

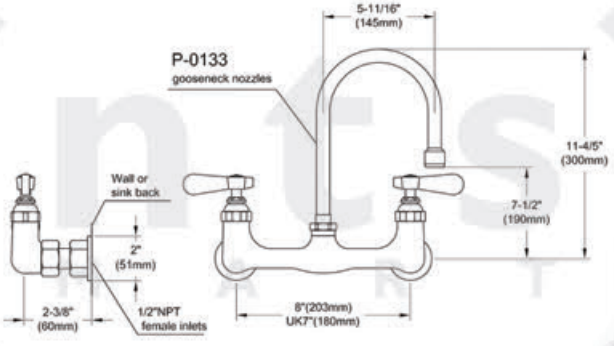

145mm



Code: 0600600564	Code: 0300700925	Code: 0300700926
Nozzle length: 5-11/16" (145 mm)	Nozzle length: 7-3/4" (192 mm)	Nozzle length: 8-3/4" (223 mm)

Deck Mixing Faucet - Hot & Cold

- Deck mounted Pantry faucet
- Lever handles
- 4" (102mm) centers
- 1/2" NPT eccentric flanged female inlets
- The product includes check valve to prevent cross-flow

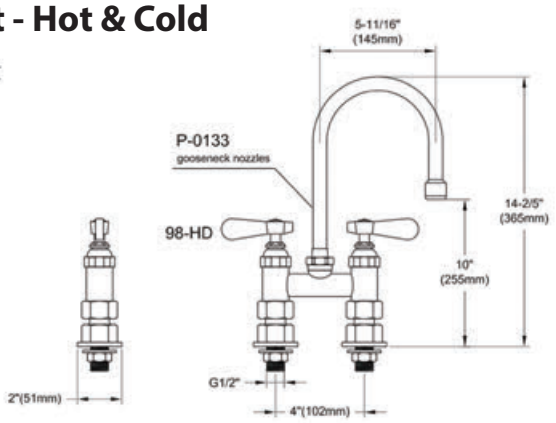



Code: 0300700918	Code: 0300700919	Code: 0300700920
Nozzle length: 5-11/16" (145 mm)	Nozzle length: 7-3/4" (192 mm)	Nozzle length: 8-3/4" (223 mm)

NTSmart CHINA Tel.+86-20-89301818/28/38 nts@ntsmart.com
NTSmart MYANMAR Tel.+95-1-7534400 nts@ntsmyanmar.com.mm
NTSmart THAILAND Tel.+66-2-8667474 sales@ntsmart.co.th
NTSmart TANZANIA Tel.+255-22-2700674/75 ntstz@ntsmart.com

Swivel Base Faucet - Hot & Cold

- Deck mounted Pantry faucet
- Lever handles
- Single hole
- 1/2" NPSM female inlets
- The product includes check valve to prevent cross-flow

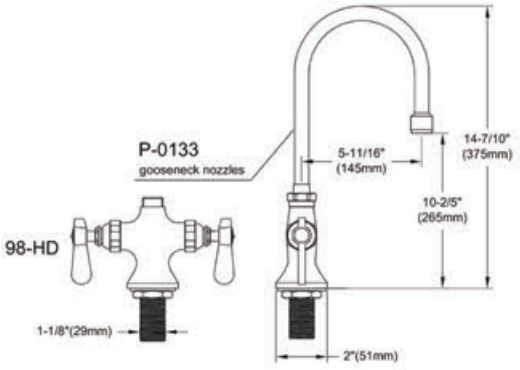



Code: 0600600468	Code: 0300700921	Code: 0300700922
Nozzle length: 5-11/16" (145 mm)	Nozzle length: 7-3/4" (192 mm)	Nozzle length: 8-3/4" (223 mm)

Swivel Base Faucet - Cold Only

- Deck mounted Pantry faucet
- Lever handle
- 1/2" NPSM male shank
- 1/4" NPT union type tailpiece
- The product includes check valve to prevent cross-flow

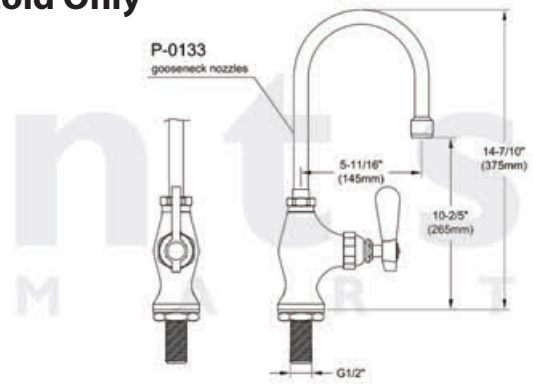



Code: 0600600467	Code: 0300700923	Code: 0300700924
Nozzle length: 5-11/16" (145 mm)	Nozzle length: 7-3/4" (192 mm)	Nozzle length: 8-3/4" (223 mm)

Wall Mounted Pantry Faucet - Cold only

- Wall mounted Pantry faucet
- Lever handle
- 1/2" NPSM male shank
- 1/4" NPT union type tailpiece
- The product includes check valve to prevent cross-flow

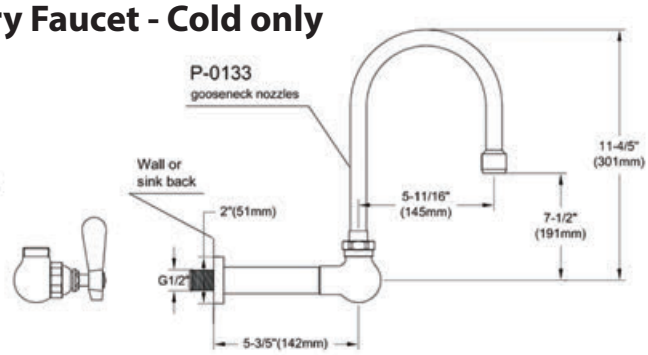



Code: 0300700927	Code: 0300700928	Code: 0300700929
Nozzle length: 5-11/16" (145 mm)	Nozzle length: 7-3/4" (192 mm)	Nozzle length: 8-3/4" (223 mm)

Deck Mixing Double Joint Faucet - Hot & Cold

- Deck mounted Pantry faucet
- Lever handles
- 1/2" NPSM eccentric flanged female inlets
- The product includes check valve to prevent cross-flow
- Double-joint nozzle: Back 12" (305 mm) + Front 12" (305 mm)



Code: 0300700930

8"(203mm) Center



Code: 0300700931

4"(102mm) Center

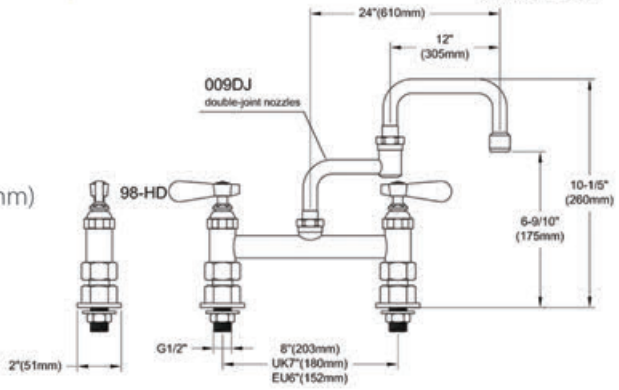

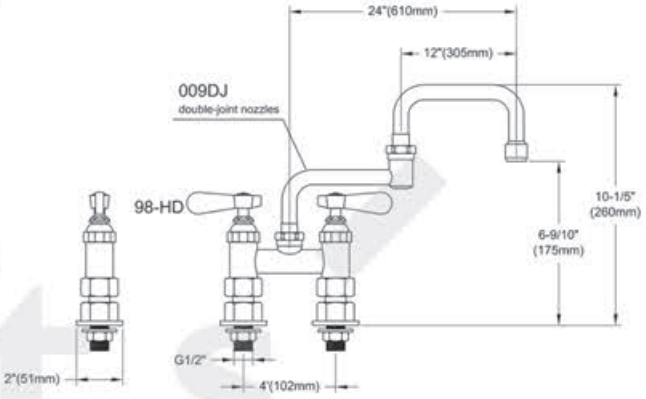

Swivel Base Double Joint Faucet- Hot & Cold

- Deck mounted Pantry faucet
- Lever handles
- Single hole
- 1/2" NPSM female inlets
- The product includes check valve to prevent cross-flow
- Double-joint nozzle: Back 12" (305 mm) + Front 12" (305 mm)



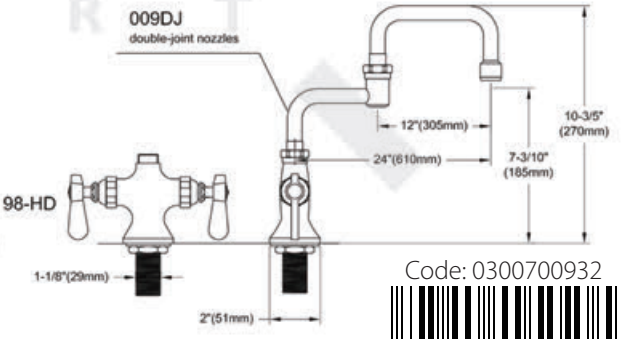

Code: 0300700932

Swivel Base Double Joint Faucet - Cold Only

- Deck mounted Pantry faucet
- Lever handle
- 1/2" NPSM male shank
- 1/4" NPT union type tailpiece
- The product includes check valve to prevent cross-flow
- Double-joint nozzle: Back 12" (305 mm) + Front 12" (305 mm)



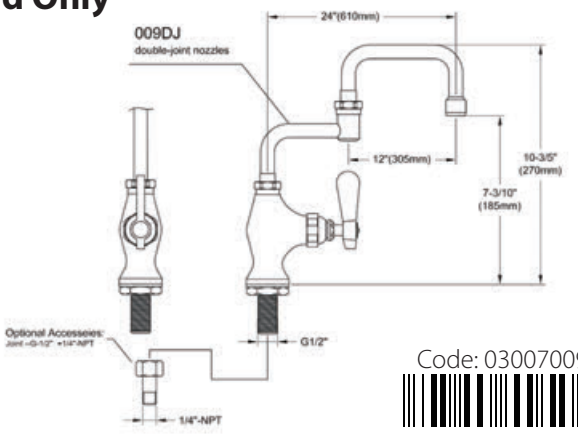

Code: 0300700933

NTSmart CHINA Tel.+86-20-89301818/28/38 nts@ntsmart.com
NTSmart MYANMAR Tel.+95-1-7534400 nts@ntsmyanmar.com.mm
NTSmart THAILAND Tel.+66-2-8667474 sales@ntsmart.co.th
NTSmart TANZANIA Tel.+255-22-2700674/75 ntstz@ntsmart.com

Wall Mounted Double Joint Faucet - Hot & Cold

- Wall mounted Pantry faucet
- Lever handles
- 8" (203 mm) center
- 1/2" NPT eccentric flanged female inlets
- The product includes check valve to prevent cross-flow
- Double-joint nozzle: Back 12" (305 mm) + Front 12" (305 mm)



Code: 0600600540

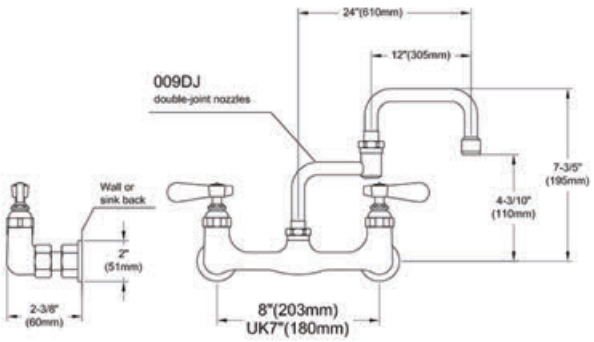

Wall Mounted Double Joint Faucet - Cold Only

- Wall mounted Pantry faucet
- Lever handle
- 1/2" NPSM male shank
- 1/4" NPT union type tailpiece
- The product includes check valve to prevent cross-flow
- Double-joint nozzle: Back 12" (305 mm) + Front 12" (305 mm)



Code: 0600600553

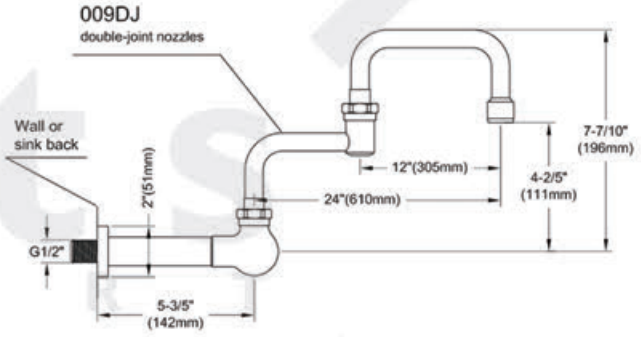

Single Hole Deck Mounted Electronic Faucet



Code: 0300700934

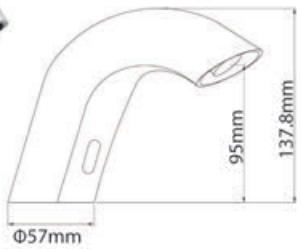



Code: 0600600498

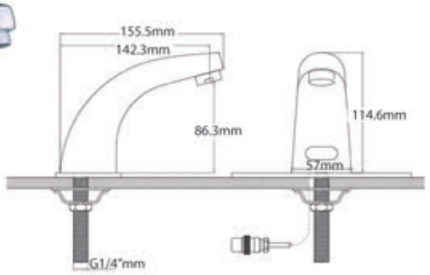



Code: 0300700935

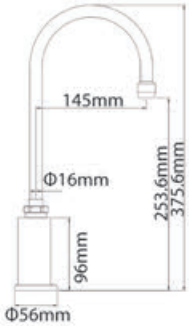



Code: 0300700936

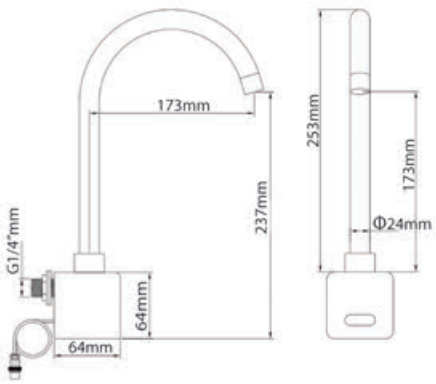

WWW.NTSMART.COM • DESIGN • EQUIPMENT • SUPPLIES • INSTALL • SERVICE

Push Tap

- Button delay 5~8 seconds
(Water flow duration in once press)
- Platsic faucet



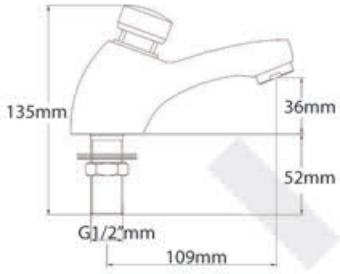

Code: 0600600469

Goose-neck Spout

- Goose-neck spout



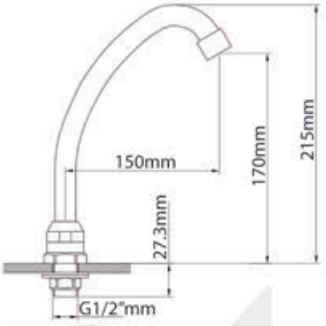

Code: 0600600538

Kitchen Faucet



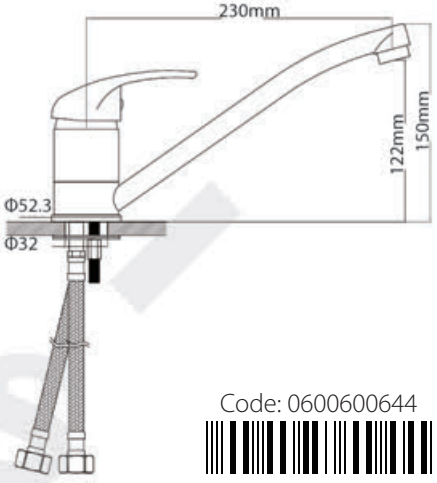

Code: 0600600644

Cast Single/Double Foot Valve



Code: 0300700937

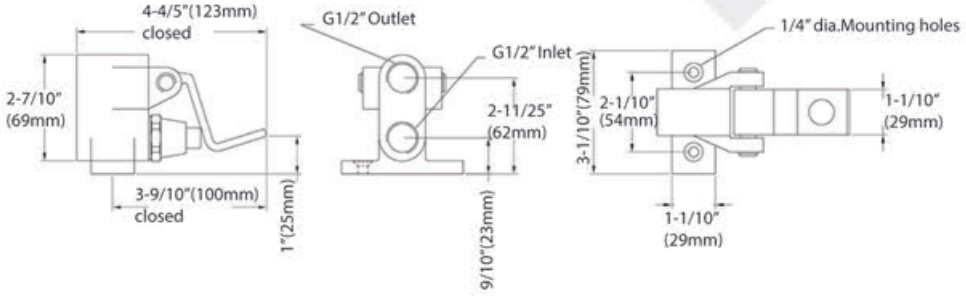



Code: 0600600516

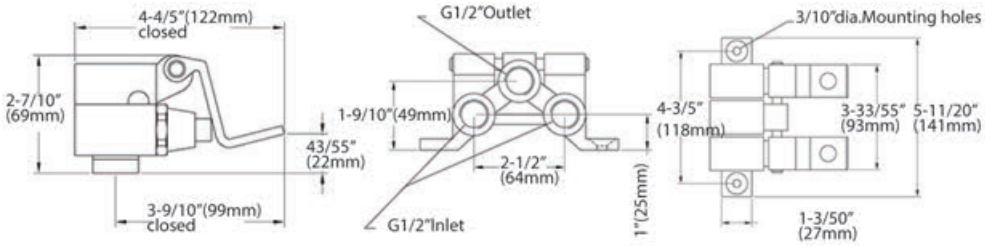

NTSmart Tel.+86-20-89301818/28/38 CHINA nts@ntsmart.com
NTSmart Tel.+95-1-7534400 MYANMAR nts@ntsmyanmar.com.mm
NTSmart Tel.+66-2-8667474 THAILAND sales@ntsmart.co.th
NTSmart Tel.+255-22-2700674/75 TANZANIA ntstz@ntsmart.com

Cast Single/Double Knee Valve



Code: 0600600537



Code: 0300700938

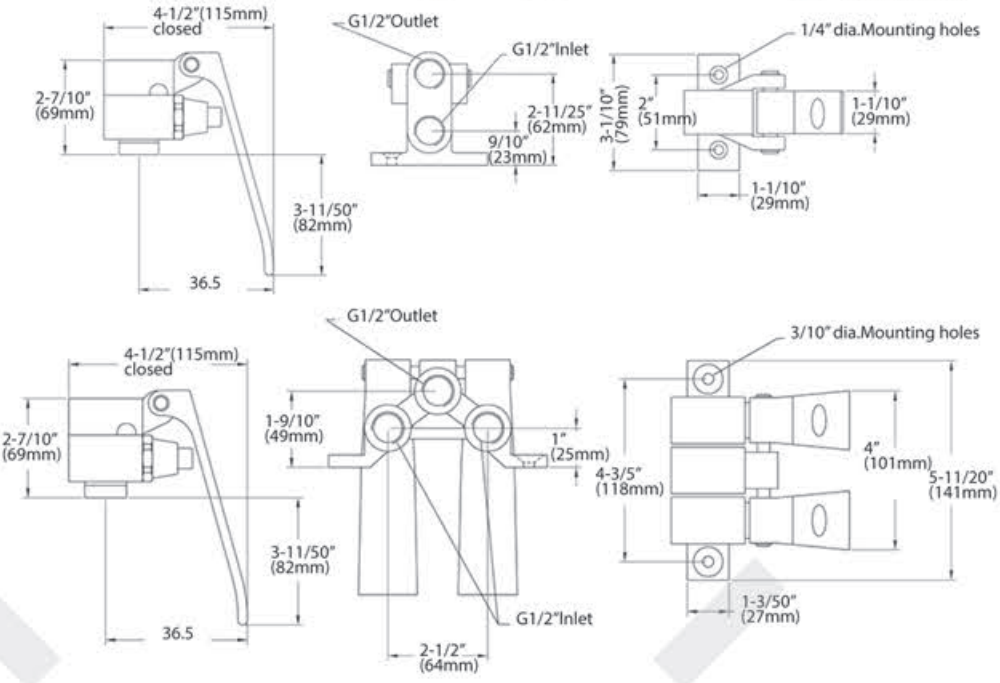

One Channel Pedal Tap



Code: 0300700939

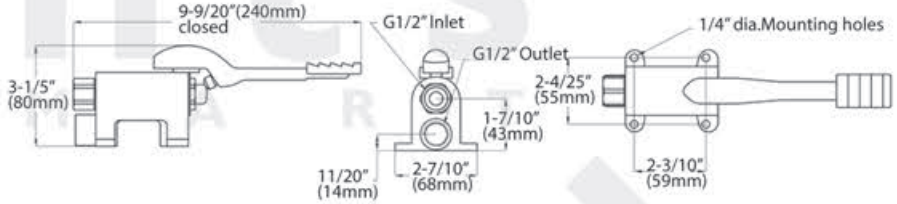

Auto Mixing Pedal Tap



Code: 0300701093

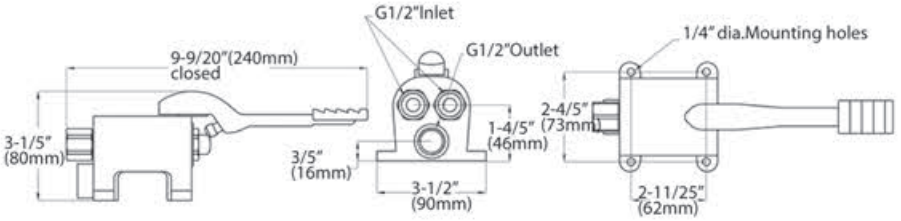

Double Channel Pedal Tap



Code: 0200300990

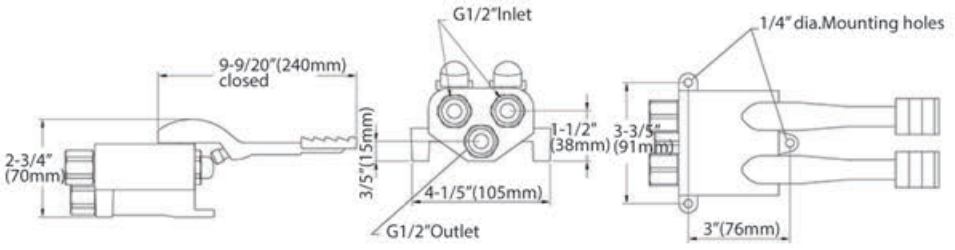

MINI Pre-rinse Faucet

- Deck-mounted pantry faucet
- Heavy duty construction
- 7"(180mm) riser
- 22"(560mm) flexible stainless steel hose
- Spray valve

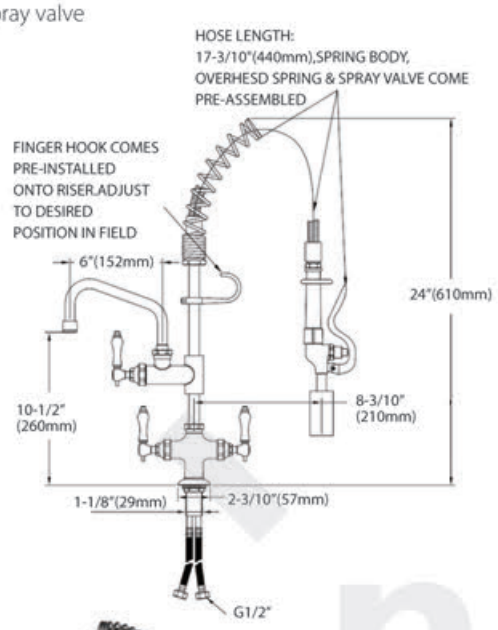



Code: 0600600470



MINI Pre-rinse Faucet

- The product includes check valve to prevent cross-flow
- Add on faucet, Swing nozzle with 6"(152mm)length
- The spray valve conforms to ANSI/ASTM F2324-03
- Ideal For food service, commercial kitchens, restaurants and hotel applications

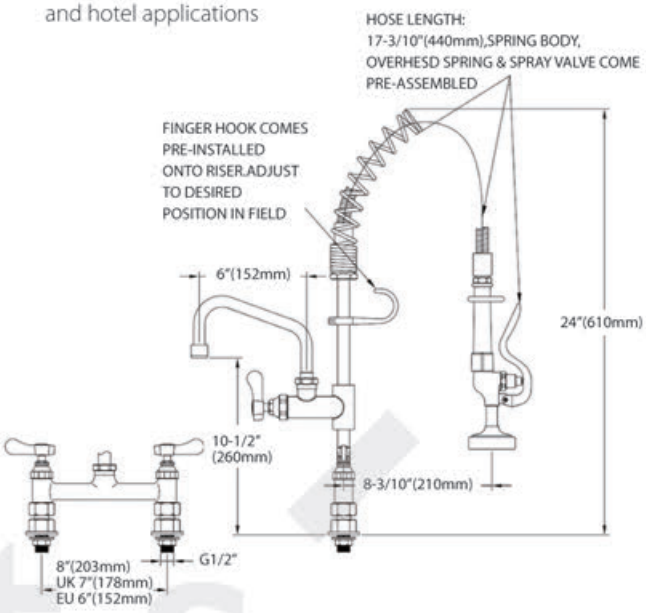



Code: 0600600471



8"(203mm) Center

Dipperwell Faucet and Dipperwell Bowl

- Facuet:

1) 5-3/4"(146mm)Overall height
2) 1-3/8"(35mm)Above table
3) 1/16"(1.6mm)Solder inlet

- Bowl:

1) Keep ice cream scoops & paddles clean & sanitized
2) Stainless steel internal cup outer container & tail washer
3) 4"(102mm)Length of 1-1/2"(38mm) brass tubing
4) Sits flish with table top
5) Drains quickly & easily



Code: 0600600461

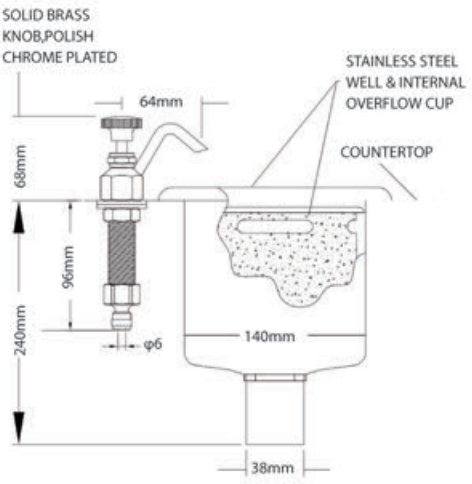

NTSmart Tel.+86-20-89301818/28/38 CHINA nts@ntsmart.com
NTSmart Tel.+95-1-7534400 MYANMAR nts@ntsmyanmar.com.mm
NTSmart Tel.+66-2-8667474 THAILAND sales@ntsmart.co.th
NTSmart Tel.+255-22-2700674/75 TANZANIA ntstz@ntsmart.com

Water Station

- Brass/ 0.9GPM
- Water station
- 10-1/2" (267mm) x 12-1/2" (318mm) drip pan is one piece 18 gauge stainless steel
- push back glass filler with 8" (203mm) clearance from tip to pan (other heights available on request)
- Coupling nut and 1/4" (6mm) sweat tailpiece for copper tube connection
- 2 1/4" diameter grid drain
- Drain 1 1/4" x 4" long. 17 guage tailpiece



Code: 0600600462

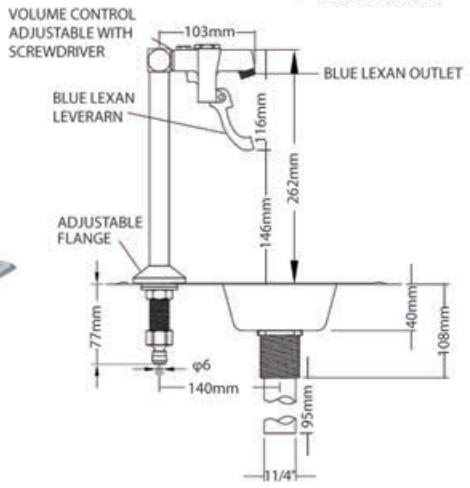

Pedestal Push Back Single Glass Filler

- 0.9GPM



Code: 0600600463

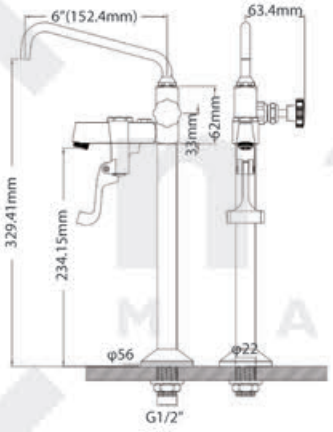

Glass Filler

- Pedestal push back single glass filler



Code: 0300700940

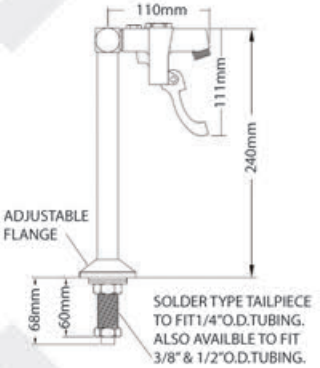

Container Rinser



The spout shown on the picture is just for demonstration for installation. The spout is not included in the product.

Code: 0600600464

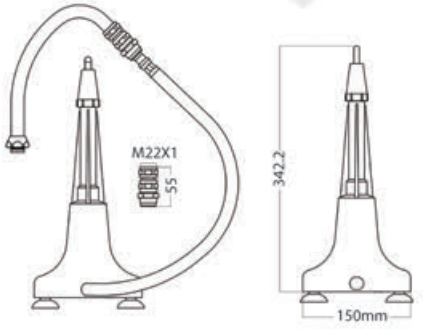

Glass Rinser

- Rectangular Shape



Code: 0300102301

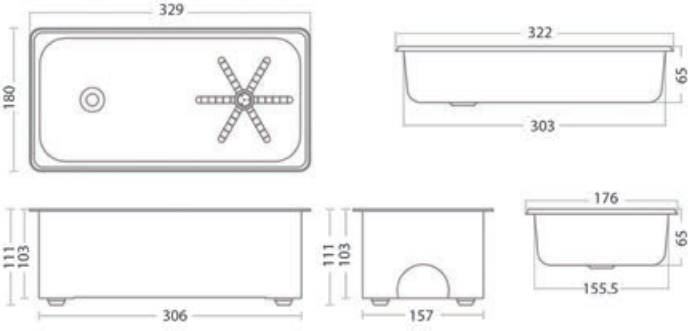

Glass Rinser

• Square Shape • Brass



Code: 0600600465

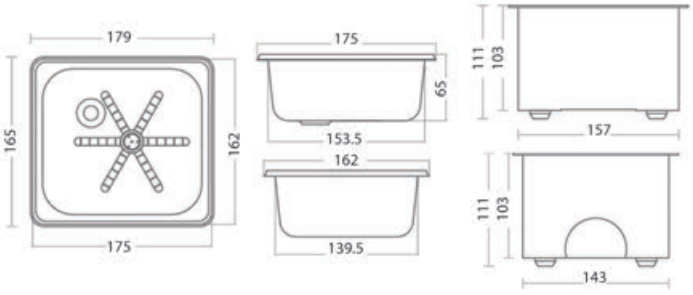

Glass Rinser

• Water Pan Design • Brass



Code: 0600600466

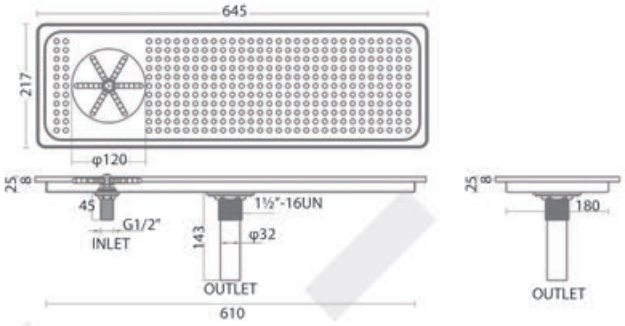

Waste Drain

• Plastic twist handle



Code: 0600600583

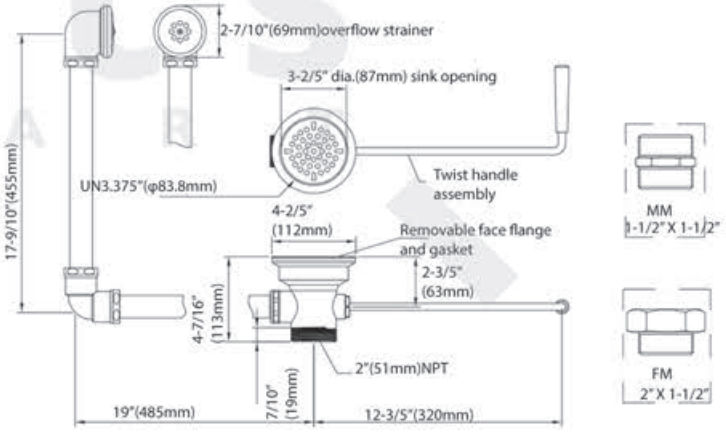

Waste Drain

• Twist handle



Code: 0600600599

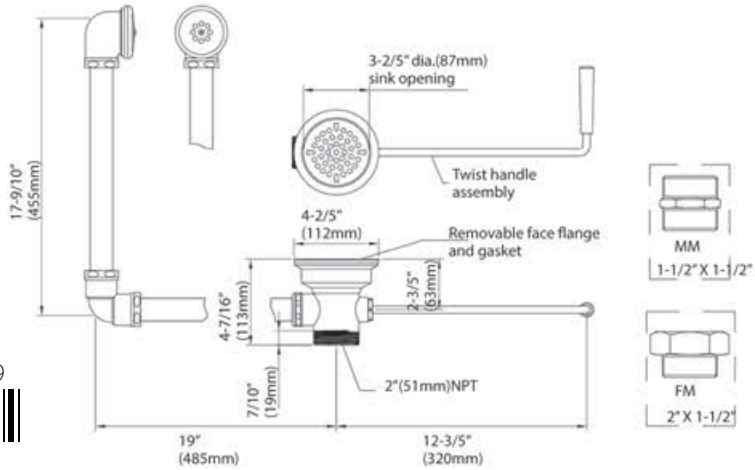

NTSmart CHINA Tel.+86-20-89301818/28/38 nts@ntsmart.com
NTSmart MYANMAR Tel.+95-1-7534400 nts@ntsmyanmar.com.mm
NTSmart THAILAND Tel.+66-2-8667474 sales@ntsmart.co.th
NTSmart TANZANIA Tel.+255-22-2700674/75 ntstz@ntsmart.com

Open Hose Reel

- Open reel with epoxy coated steel finish
- Heavy-duty nontoxic blue hose with knitted reinforcement 7/8"-20UNEF female I.D., Rated to 300PSI, Burst pressure: 1000PSI, Working temperature: 0-100℃ (not recommend for steam purpose)
- Connection SPRAY VALVE
- Ratcheting system holds the length of hose until a slight tug, retracts automatically
- 3/8""NPT female inlet
- Adjustable hose bumper
- Multi-fit bracket for wall, ceiling or under counter mounting

Top-Rinse WATER INDUSTRY



Length: 7.5m
Code: 0300700941

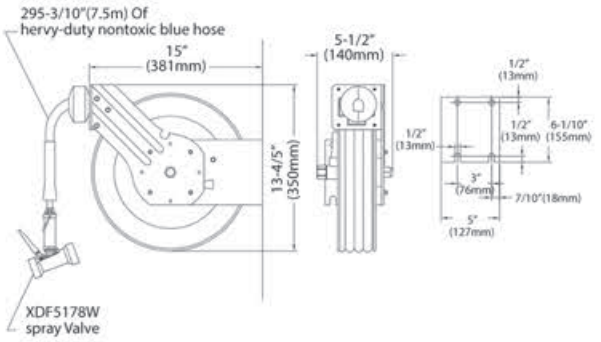

Length: 11m
Code: 0300700942



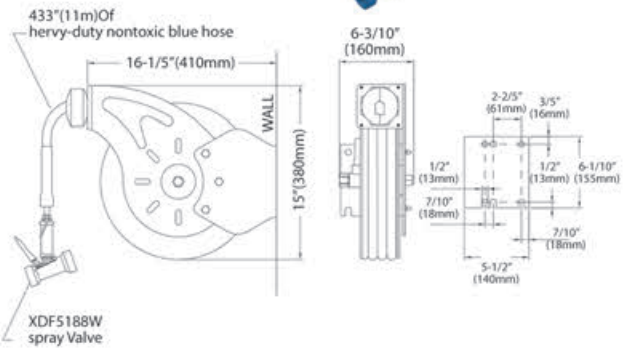

Length: 15m
Code: 0300700943



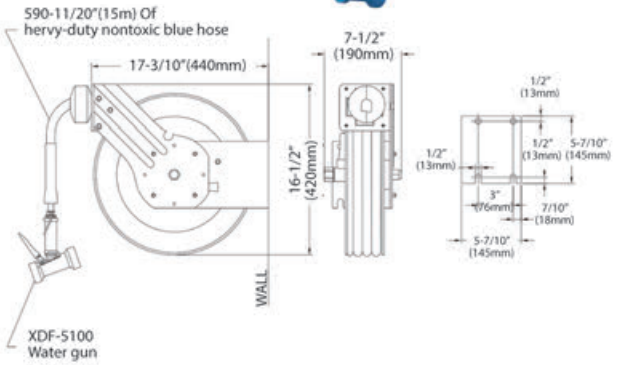

Length: 20m
Code: 0300700944



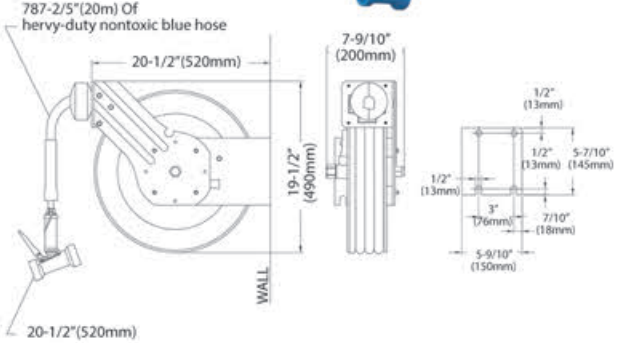

Enclosed hose reel

Length: 9.1m
Code: 0300700991



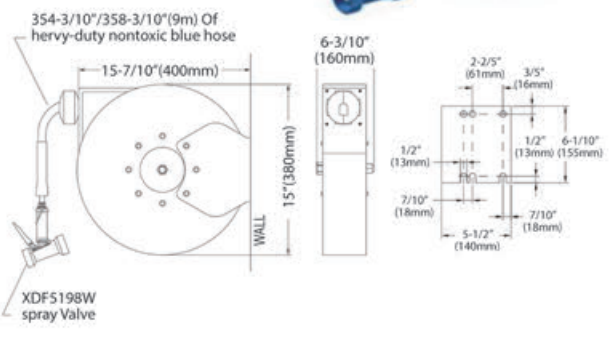

Sink

- Easy to clean
- Suitable size for industrial kitchen
- Stain finish
- MOQ:100 pieces
- Packing: plastics foam+outer carton



Code: 0300700490
Code: 0300700495
Code: 0300700984
Code: 0300700986



Code: 0300700945
Code: 0300700947
Code: 0300700489
Code: 0300700946
Code: 0300700948
Code: 0300700988



Code: 0300700493
Code: 0300700949
Code: 0300700492
Code: 0300700987
Code: 0300700950
Code: 0300700989

Sink-Without Hole



Code: 0300700491
Code: 0300700496
Code: 0300700983
Code: 0300700985

Code	Dimension(mm)	Thickness	Material	
0300700490	400x400x300	1.15mm	stainless steel 201	With one middle drain hole
0300700984	400x400x300	1.15mm	stainless steel 304	With one middle drain hole
0300700495	500x500x300	1.15mm	stainless steel 201	With one middle drain hole
0300700986	500x500x300	1.15mm	stainless steel 304	With one middle drain hole
0300700945	450x500x280	1.15mm	stainless steel 201	With one side drain hole
0300700946	450x500x280	1.15mm	stainless steel 304	With one side drain hole
0300700947	500x500x300	1.15mm	stainless steel 201	With one side drain hole
0300700948	500x500x300	1.15mm	stainless steel 304	With one side drain hole
0300700489	525x400x280	1.15mm	stainless steel 201	With one side drain hole
0300700988	525x400x280	1.15mm	stainless steel 304	With one side drain hole
0300700493	450x450x300	1.15mm	stainless steel 201	With one middle drain hole one overflow hole
0300700987	450x450x300	1.15mm	stainless steel 304	With one middle drain hole one overflow hole
0300700949	500x500x300	1.15mm	stainless steel 201	With one side drain hole one overflow hole
0300700950	500x500x300	1.15mm	stainless steel 304	With one side drain hole one overflow hole
0300700492	700x500x300	1.15mm	stainless steel 201	With one side drain hole one overflow hole
0300700989	700x500x300	1.15mm	stainless steel 304	With one side drain hole one overflow hole
0300700491	400x400x300	1.15mm	stainless steel 201	Without hole
0300700983	400x400x300	1.15mm	stainless steel 304	Without hole
0300700496	500x500x300	1.15mm	stainless steel 201	Without hole
0300700985	500x500x300	1.15mm	stainless steel 304	Without hole

NTSmart CHINA Tel.+86-20-89301818/28/38 nts@ntsmart.com
NTSmart MYANMAR Tel.+95-1-7534400 nts@ntsmyanmar.com.mm
NTSmart THAILAND Tel.+66-2-8667474 sales@ntsmart.co.th
NTSmart TANZANIA Tel.+255-22-2700674/75 ntstz@ntsmart.com

Sink Drainer



Code: 0300700951

Code: 0300700952



Code: 0300700992

Code	Dimension(mm)	Material	Weight
0300700951	110/114	Stainless steel 201	353g
0300700952	110/114	Stainless steel 304	353g
0300700992	2"	Stainless steel 304	

Steam Pressure Safety Valves



Code: 0600600589

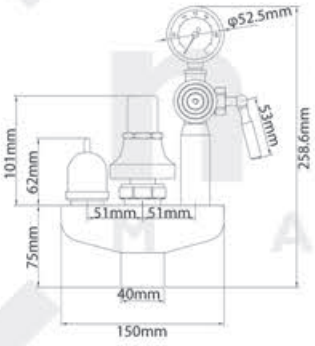



Code: 0600600594

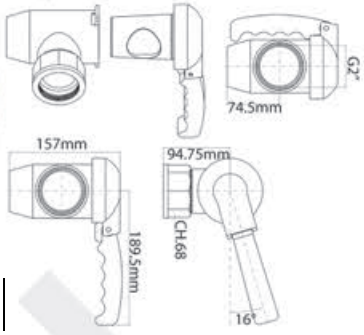

Bullet Feet



Code: 0300700953



Code: 0300700954



Code: 0300701089



Code: 0300701090

Code	Dimension	Material	Surface processing	Dead load	Adjusting range
0300700953	38x38mm	Zinc alloy	Light, sanding	900kg	38-67mm
0300700954	30x30mm	Zinc alloy	Nickelizing chromium plating	900kg	23-52mm
0300701089	38x38mm	S/S 201& S/S304	Light, sanding	900kg	40-60mm
0300701090	38x38mm	S/S 201& S/S304	Light, sanding	900kg	45-65mm

Gravity Pin



Code: 0300700955



Code: 0300700956



Code: 0300700957



Code: 0300700958

Code	Dimension	Surface processing	Material	Dead load	Adjusting range
0300700955	H 80mm	Sanding	S/S 304		
0300700956	H 80mm	Sanding	S/S 304		
0300701087	H 50mm	Sanding	S/S 304		
0300701098			S/S 304 (Inner part is Nylon)	800kg	140-220mm

Grease Trap



Code: 0300700993

Code: 0300700960

Code: 0300700994

Code: 0300700961

Code	Dimension	GPM flow	Material	Thickness
0300700993	511x335x284mm	15GPM	S/S 201	1.0mm
0300700960	511x335x284mm	15GPM	S/S 304	0.8mm
0300700994	400x300x300mm	12GPM	S/S 201	1.0mm
0300700961	400x300x300mm	12GPM	S/S 304	0.8mm

Grease Filter for Exhaust Hood

- Material: S/S 201



Code: 0300800096

Size: 500x500x40mm

Code: 0300800097

Size: 500x500x35mm

Exhaust hood light

- Material: Glass & Aluminum



Code: 0300700990

NTSmart Tel.+86-20-89301818/28/38 CHINA nts@ntsmart.com
NTSmart Tel.+95-1-7534400 MYANMAR nts@ntsmyanmar.com.mm
NTSmart Tel.+66-2-8667474 THAILAND sales@ntsmart.co.th
NTSmart Tel.+255-22-2700674/75 TANZANIA ntstz@ntsmart.com

Hood Lights



Code: 0300800101

Power:3W LM:320LM
Dia 30mm



Code: 0300800102

Power:4W LM:320LM
Dia 40mm

LED Hood light

- Voltage:AC90-265V
- Light color: white
- Power:20W
- IP Grade:IP65
- Size:24x12cm

Code: 0300800107



Insect Killer

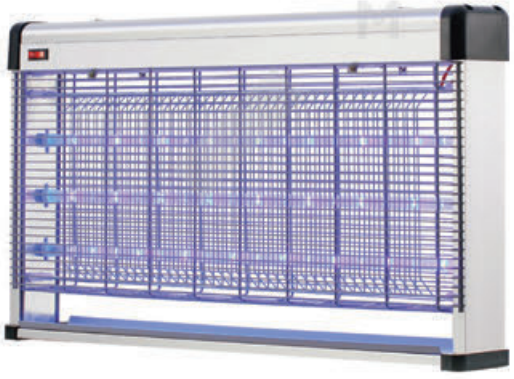



Code: 0800800543

Code: 0800800544

Code: 0800800542

Code	Dimension(mm)	Power	LED	Voltage	Usage	NW	GW
0800800543	390x85x295	15W	4W x2	220-240V	60-80sqm	2.0kg	2.9kg
0800800544	495x85x316	20W	6W x2	220-240V	80-100sqm	2.45kg	3.05kg
0800800542	645x85x380	28W	6W x3	220-240V	130-150sqm	3.5kg	4.3kg

Hot Counter Warmer

- Stainless steel heating element at the bottom
- Mirror polished stainless steel structure
- Thermostat control, durable and robust
- Circuit breaker to protect electrical components
- Spot light on top for better view of food displayed
- Three sides colored posters to attract customer
- Temperature display on top to monitor inside temperature
- Light switch with green indicator
- Swing door for easy opening
- Cool to touch Bakelite handle on door
- Sloped shelf for better view from customer
- Anti slippery rubber foot
- Heating indicator
- Available in different sizes



Code: 0300101872



Code: 0300101873

Code	Dimension(mm)	Temperature	No. of shelves	Power	Voltage	NW
0300101872	350x425xH500	30-85°C	3	850w	220~240V	16kg
0300101873	350x425xH710	30-85°C	5	850w	220~240V	17kg

Hot Counter Warmer

- Transparent Perspex at all sides
- Stainless steel bottom
- Thermostat control, durable and robust
- Hi limiter to protect electrical components
- Cool to touch plastic handle
- Water reservoir at the bottom to add humidity when needed
- Power switch with green indicator
- Anti slippery rubber foot
- Heating indicator
- Available in single and double layers



Code: 0300101875



Code: 0300101876

Code	Dimension(mm)	Temperature	No. of shelves	Power	Voltage	NW
0300101875	500x360x H260	30-85°C	1	250w	220~240V	13kg
0300101876	500x360x H395	30-85°C	2	250w	220~240V	14kg

NTSmart CHINA Tel.+86-20-89301818/28/38 nts@ntsmart.com
NTSmart MYANMAR Tel.+95-1-7534400 nts@ntsmyanmar.com.mm
NTSmart THAILAND Tel.+66-2-8667474 sales@ntsmart.co.th
NTSmart TANZANIA Tel.+255-22-2700674/75 ntstz@ntsmart.com

Hot Counter Warmer

- Toughened glass sides and door, curved glass in front
- Stainless steel bottom
- Thermostat control, durable and robust
- Hi limiter to protect electrical components
- Cool to touch plastic handle
- Water reservoir at the bottom to add humidity when needed
- Extra deep reservoir GN1/9 x 2.5" to last for whole day
- Inside chamber to be GN1/1 size
- Rubber seal between front and side glass to prevent heat loss
- Anti slippery rubber foot
- Heating indicator
- Available in single and double levels



Code: 0300101877



Code: 0300101878

Code	Dimension(mm)	Temperature	No. of shelves	Power(W)	Voltage	NW
0300101877	560x395xH310	30-85°C	1	450	220~240V	13kg
0300101878	560x395xH430	30-85°C	2	450	220~240V	19kg

Hot Counter Warmer

- Toughened glass all sides
- Thermostat controlled, durable and robust
- Temperature display to monitor inside temperature
- Temperature range 30~90 C
- Cool to touch plastic handle
- Water reservoir at the bottom to add humidity when needed
- Extra deep reservoir GN1/9 x 2.5" to last for whole day
- Three levels of shelves inside chamber
- Shelf height can be adjusted
- Rubber seal between door and frame to prevent heat loss
- Vertical fluorescent lamp on both sides for better food display
- Transparent cover on fluorescent lamps
- Filament lamp on top for advertising posters to attract customer
- On/off switch for lamps
- Anti slippery rubber foot
- Heating indicator
- Available in silver or black color



Code: 0300101879

Code: 0300102029

Code: 0300102030

Code	Dimension(mm)	Shelf size(mm)	Temperature	Capacity	Power	Voltage	NW
0300101879	660x437x H655	580x275 580x298 580x318	30-90°C	110L	1840w	220~240V	35kg
0300102029	900x480x H590	820x315 820x340 820x360	30-90°C	150L	1840w	220~240V	50kg
0300102030	1200x480x H590	1120x315 1120x340 1120x360	30-90°C	370L	2200w	220~240V	72kg

Hot Counter Warmer

- Toughened glass front and back
- All stainless steel structure
- Thermostat controlled, durable and robust
- Temperature display to monitor inside temperature
- Temperature range 30~90 ℃
- Crumb tray at the bottom
- Shelf height can be adjusted
- Sliding door in the front
- On/off switch for lamps
- Anti slippery rubber foot
- Heating indicator



Code: 0300101880

Code: 0300102031

Code	Dimension(mm)	Shelf size(mm)	No. of shelves	Temperature	Power	Voltage	NW
0300101880	640x360xH530	569x300	4	30-90°C	1000w	220~240V	21kg
0300102031	865x360xH625	794x300	5	30-90°C	1500w	220~240V	35kg

Hot Counter Warmer

- Perspex flip door on both sides, pass through structure
- All stainless steel structure with reinforced frame
- Infinite switch controlled, durable and robust
- Digital temperature display to monitor inside temperature
- Top for dry heating, bottom for humidity heating
- Temperature range 30~85 ℃
- Automatic water refilling system with manual bypass
- Float switch to prevent heating without water
- See-through structure ensures better view of food
- Humidity heating ensures food to be served warmly fresh and tasty
- Heating lamp switch to be controlled separately
- Perforated pans at the bottom
- Drainage pipe at one side for easy removal of waste water
- Easy access to mica heaters at the bottom for maintenance
- Tong holders on one side
- Anti slippery rubber foot
- Heating indicator



Code: 0300102025

Code: 0300102026

Code: 0300101874

Code	Dimension(mm)	Pan qty. (mm)	Bottom	Temperature	Power	Voltage	NW
0300102025	914x690xH830	Top 330x460 - 2pcs	400x600 - 1pc	30~85°C	2020w	220~240V	56kg
0300102026	1214x690xH830	Top 330x460 - 3pcs	400x600 - 2pc	30~85°C	2720w	220~240V	75kg
0300101874	1536x690xH830	Top 400x600 - 2pcs	400x600 - 3pc	30~85°C	32400w	220~240V	94kg

NTSmart Tel.+86-20-89301818/28/38 CHINA nts@ntsmart.com
NTSmart Tel.+95-1-7534400 MYANMAR nts@ntsmyanmar.com.mm
NTSmart Tel.+66-2-8667474 THAILAND sales@ntsmart.co.th
NTSmart Tel.+255-22-2700674/75 TANZANIA ntstz@ntsmart.com

Hot Counter Warmer

- Layers stainless steel net, adjustment height net.
- Four hollow glass
- Can steaming 80 pcs for diameter 7 cm size bun.



Electric Type
Code: 0300101955



Electric Type
Code: 0300101956



Gas Type
Code: 0300101957

Code	Dimension(mm)	Power	Voltage	Layer
0300101955	380x400x745	1.1KW	230V	5
0300101956	460x520x830	1.5KW	230V	6
0300101957	420x400x370			5

Hot Dog Warmer

1. 6mm baked curved glass side tempered glass.
2. Including advertising lighting

Code: 0300101690



Food Warmer

1. 6mm baked curved glass side tempered glass.
2. With light box, with stainless steel tray and accessories (without rotating flavor rack) 4 with black pebbles

Code: 0300101691



Hot Air Circulation Lunch Box Food Warmer

1. 6mm baked curved glass side tempered glass.
2. Stainless steel shelf.
3. Including advertising lighting

Code: 0300101692



Desktop Steam Boiler

1. Including advertising lighting, body silk screen
2. With 4pcs SS304 tensile cover

Code: 0300102510



Code	Dimension(mm)	Power	Voltage	Material	Thickness
0300101690	650x450x733	600w	220V	S/S 201	0.8mm
0300101691	483x460x765	1800w	220V	S/S 201	0.8mm
0300101692	658x600x670	1300w	220V	S/S 201	0.8mm
0300102510	402x435x800	1800w	220V	S/S 201	0.8mm

- Double temperature protection controller
- Adjustable temperature
- Refrigerant: R134A
- Stainless steel shelves
- Anti-explasion lamp
- Liquid crystal figures clearly display temperature

Hot Food Showcase (Square Glass)

400L
Code: 0300600767

550L
Code: 0300600768

700L
Code: 0300600769

850L
Code: 0300600994



Hot Food Deleux Showcase (Curved Glass)

380L
Code: 0300600770

520L
Code: 0300600771

660L
Code: 0300600772



Code	Dimension(mm)	Voltage	Power(kw)	Temperature	Material	Capacity(L)
0300600767	900x740x1350	220V/ 50 Hz	0.83	35-70°C	Glass + Stainless steel	400
0300600768	1200x740x1350	220V/ 50 Hz	1.05	35-70°C	Glass + Stainless steel	550
0300600769	1500x740x1350	220V/ 50 Hz	1.13	35-70°C	Glass + Stainless steel	700
0300600994	1800x740x1350	220V/ 50 Hz	1.29	35-70°C	Glass + Stainless steel	850
0300600770	900x760x1350	220V/ 50 Hz	0.83	35-70°C	Glass + Stainless steel	380
0300600771	1200x760x1350	220V/ 50 Hz	1.05	35-70°C	Glass + Stainless steel	520
0300600772	1500x760x1350	220V/ 50 Hz	1.13	35-70°C	Glass + Stainless steel	660

Double Layers Right-Angle Cake Showcase

- Two layer insulated glass with heating film to prevent condensation.
- linternal LED display light
- Digital temperature Controller
- Equipped with famous compressor Embraco
- High efficiency cooling fan - EBM fan
- Equipped with drain heater to make sure there is no drain water spilled

250L
Code: 0300900283



380L
Code: 0300900047

380L
Code: 0300600071

580L
Code: 0300600624

Code	Dimension(mm)	Capacity	Power	Voltage	Temperature	Material	Color
0300900283	900x685x1220	280L	560w	220V/ 50 Hz	2-8°C	Glass + marble base	Black/ White
0300900047	1200x685x1220	380L	709w	220V/ 50 Hz	2-8°C	Glass + marble base	Black/ White
0300600071	1500x685x1220	480L	905w	220V/ 50 Hz	2-8°C	Glass + marble base	Black/ White
0300600624	1800x685x1220	580L	995w	220V/ 50 Hz	2-8°C	Glass + marble base	Black/ White

NTSmart Tel.+86-20-89301818/28/38 CHINA nts@ntsmart.com | NTSmart Tel.+95-1-7534400 MYANMAR nts@ntsmyanmar.com.mm | NTSmart Tel.+66-2-8667474 THAILAND sales@ntsmart.co.th | NTSmart Tel.+255-22-2700674/75 TANZANIA ntstz@ntsmart.com

Three Layers Right-Angle Cake Showcase



390L
Code: 0300900284

510L
Code: 0300900048

660L
Code: 0300600072

800L
Code: 0300900285

Code	Dimension(mm)	Capacity	Power	Voltage	Temperature	Material	Color
0300900284	900x685x1400	390L	560w	220V/ 50 Hz	2-8°C	Glass + marble base	Black/ White
0300900048	1200x685x1400	510L	799w	220V/ 50 Hz	2-8°C	Glass + marble base	Black/ White
0300600072	1500x685x1400	660L	1115w	220V/ 50 Hz	2-8°C	Glass + marble base	Black/ White
0300900285	1800x685x1400	800L	1222w	220V/ 50 Hz	2-8°C	Glass + marble base	Black/ White

Ice-cream Showcase



380L
Code: 0300900050

480L
Code: 0300600827

580L
Code: 0300600828

680L
Code: 0300600999

Code	Dimension(mm)	Capacity	Power	Voltage	Temperature	Material	Color	Accessories
0300900050	1200x1130x1280	380L	1000w	220V/ 50 Hz	-22~-16°C	Glass + marble base	White	12x1/4 GN Pan
0300600827	1500x1130x1280	480L	1137w	220V/ 50 Hz	-22~-16°C	Glass + marble base	White	16x1/4 GN Pan
0300600828	1800x1130x1280	580L	1516w	220V/ 50 Hz	-22~-16°C	Glass + marble base	White	20x1/4 GN Pan
0300600999	2000x1130x1280	680L	1550w	220V/ 50 Hz	-22~-16°C	Glass + marble base	White	22x1/4 GN Pan

Counter Top Ice Cream Showcase

- Fan cooling type.
- Temperature control type: Digital temperature control
- Insulation type: Polurethane+ hollow film coated glass
- Compressor: Embraco



120L
Code: 0300601000

176L
Code: 0300601001

232L
Code: 0300601002

Code	Dimension(mm)	Capacity	Voltage	Temperature	Material
0300601000	900x550x810	120L, 4 pcs x1/3 GN Pan	220V/ 50 Hz	-20~-16°C	Glass + marble base
0300601001	1256x550x810	176L, 6 pcs x1/3 GN Pan	220V/ 50 Hz	-20~-16°C	Glass + marble base
0300601002	1612x550x810	232L, 8 pcs x1/3 GN Pan	220V/ 50 Hz	-20~-16°C	Glass + marble base

Counter Top Ice Cream Showcase

- Fan cooling type.
- Temperature control type: Digital temperature control
- Insulation type: Polurethane+ hollow film coated glass
- Compressor: Embraco



120L
Code: 0300601003

176L
Code: 0300601004

232L
Code: 0300601005

Code	Dimension(mm)	Capacity	Voltage	Temperature	Material
0300601003	900x550x810	120L, 4 pcs x1/3 GN Pan	220V/ 50 Hz	-20~-16℃	Glass + marble base
0300601004	1256x550x810	176L, 6 pcs x1/3 GN Pan	220V/ 50 Hz	-20~-16℃	Glass + marble base
0300601005	1612x550x810	232L, 8 pcs x1/3 GN Pan	220V/ 50 Hz	-20~-16℃	Glass + marble base

Nakajima Display Showcase

- OEM LOGO supported
- Customize size



Code: 0300601031



Code: 0300601032

Wall shelves showcase



Code: 0300601033

Fresh bread showcase



Code: 0300601034

Code	Dimension(mm)	Voltage	Power(W)
0300601031	2000x1000x1380	220v/50Hz	100
0300601032	2500x1000x1380	220v/50Hz	100
0300601033	1600x500x2000	220v/50Hz	
0300601034	2200x700x1100	220v/50Hz	

Sushi Showcase

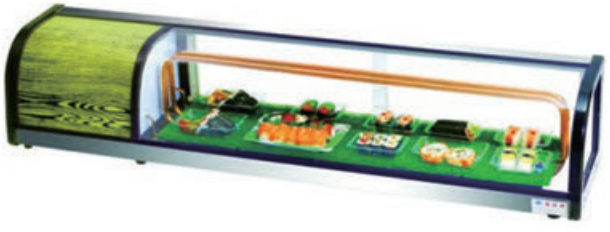

Code: 0300601097

Code: 0300601096

Code	Dimension(mm)	Cooling mode	Temperature	Capacity	Power(kw)	Refrigerant
0300601096	1400x300x295	Directed cooling	5-15℃	90L	0.12	R134a
0300601097	1700x300x295	Directed cooling	5-15℃	115L	0.135	R134a

NTSmart Tel.+86-20-89301818/28/38 CHINA nts@ntsmart.com
NTSmart Tel.+95-1-7534400 MYANMAR nts@ntsmyanmar.com.mm
NTSmart Tel.+66-2-8667474 THAILAND sales@ntsmart.co.th
NTSmart Tel.+255-22-2700674/75 TANZANIA ntstz@ntsmart.com

Electric Coffee Boiler

- Inner layer thickness: 0.4mm S.S 304
- Outter layer thickness: 0.4mm S.S 201
- Double wall structure
- One piece structure for easy cleaning
- Double overheat protection
- Automatic heating and keep warm features
- ON/OFF switch
- With 30-110 ℃ adjustable thermostat



9L
Code: 0100100268

14.5L
Code: 0100100099

18.1L
Code: 0100100269

Code	Dimension(mm)	Net Capacity	Gross Capacity	Voltage	Power
0100100268	Φ220x440	6.3 L	9 L	220-240V, 50-60HZ	950w
0100100099	Φ270x445	9.3 L	14.5 L	220-240V, 50-60HZ	1650w
0100100269	Φ270x515	13.2 L	18.1 L	220-240V, 50-60HZ	1650w

Electric Water Boiler

- Double wall structure
- One piece structure for easy cleaning
- Twist-lock design on the lid and body
- Cool touch handles
- Water gauge indication and plastic tap
- Double overheat protection
- Automatic heating and keep warm features
- ON/OFF switch
- With 30-110 ℃ adjustable thermostat
- Inner layer thickness:0.4mm S.S 304
- Outter layer thickness:0.4mm S.S 201



8L
Code: 0100100265

16L
Code: 0100100266

25L
Code: 0300102192

Code	Dimension(mm)	Net Capacity	Gross Capacity	Voltage	Power
0100100265	Φ220x440	7.2 L	8 L	220-240V, 50-60 Hz	1300w
0100100266	Φ270x515	14.8 L	16 L	220-240V, 50-60 Hz	2250w
0300102192	Φ310x570	24L	25 L	220-240V, 50-60 Hz	2600w

Electric Water Boiler

- Multi point detection of water level, avoiding r epeatedly boiled water
- Smart error display
- Water shortage and power cut-off protection
- Food grade 304 stainless steel for whole machine
- High class electronic components, moisture proof, and high-temperature resistanc



10L
Code: 0100100477

30L
Code: 0100100478

Code	Size(mm)	Power	Capacity	Productivity(L/h)	Water Tap
0100100477	180x320x630	2kw	10L	25	1
0100100478	180x390x740	3kw	30L	45	1

Electric Water Boilers Series (Station Type) (Normal Tap)

- Microcomputer control, automatic work
- Equipped with water level sensor & temperature sensor to make sure the output water is 100% boiling water
- Temperate can be adjusted.
- LED + digital display
- Faucet with hot injure protect coat.
- Save 30% engery with all foam



10L
Code: 0100100436

30L
Code: 0100100391

Electric Water Boilers Series (station type) (Tomlinson tap)

- Microcomputer control, automatic work
- Equipped with water level sensor & temperature sensor to make sure the output water is 100% boiling water
- Temperate can be adjusted.
- LED + digital display
- Faucet with hot injure protect coat.
- Save 30% engery with all foam

Tomlinson Tap





10L
Code: 0100100437

30L
Code: 0100100438

Code	Dimension(mm)	Power Supply	Power	Capacity	Productivity	Water Tap	Color option
0100100436	190x410x630	220v/50Hz	2kw	10L	25L/h	1 pc	beige / black
0100100391	190x500x740	220v/50Hz	3kw	30L	45L/h	1 pc	beige / black
0100100437	190x410x630	220v/50Hz	2kw	10L	25L/h	1 pc	beige / black
0100100438	190x500x740	220v/50Hz	3kw	30L	45L/h	1 pc	beige / black

Coffee Tea Water Boiler

- Multi function: coffee, tea and water



32L
Code: 0100100439



52L
Code: 0100100440

Code	Dimension(mm)	Power	Voltage	Electric current	Capacity	Tea capacity	Coffee capacity
0100100439	390x440x580	3kw	220v/50Hz	13.6A	32L	3L	3L
0100100440	510x480x720	3kw+3kw	220v/50Hz	13.6A+13.6A	52L	6L	6L

NTSmart Tel.+86-20-89301818/28/38 CHINA nts@ntsmart.com
NTSmart Tel.+95-1-7534400 MYANMAR nts@ntsmyanmar.com.mm
NTSmart Tel.+66-2-8667474 THAILAND sales@ntsmart.co.th
NTSmart Tel.+255-22-2700674/75 TANZANIA ntstz@ntsmart.com

Microcomputer Quick Electric Water Boiler(Wall Hang Type)

- Multi point detection of water level, avoiding repeatedly boiled water
- Smart error display, Digital temperature display
- Water shortage and power cut-off protection
- Food grade 304 stainless steel for whole machine
- High class electronic components, moistureproof, and high-temperature resistance



8L
Code: 0100100479

16L
Code: 0100100480

25L
Code: 0100100290

Code	Dimension(mm)	Power	Capacity	Water taps (Temperature)
0100100479	305x190x470	1.5kw	8L	1 hot, 1 direct drinking
0100100480	355x220x570	2.0kw	16L	1 hot, 1 direct drinking
0100100290	405x250x620	3.0kw	25L	1 hot, 1 direct drinking

Microcomputer Quick Electric Water Boiler(Supporting Type)

- All Stainless steel 304 material
- Mircocomputer control the water level
- Save 40% energy with all foam structure.
- Big volume.



30L
Code: 0100100441



50L
Code: 0100100392

90L
Code: 0100100442

120L
Code: 0100100443

Code	Dimension(mm)	Voltage	Power	Electric Current	Capacity	Water Yield	Water tap
0100100441	410x380x740	220v/50Hz	3kw	13.6A	30L	45L/h	1 pcs
0100100392	460x400x900	380v/50Hz/3N	6kw	9.1A	50L	90L/h	2 pcs
0100100442	560x420x1000	380v/50Hz/3N	9kw	13.6A	90L	120L/h	2 pcs
0100100443	560x420x1000	380v/50Hz/3N	12kw	18.2A	120L	170L/h	2 pcs

Energy Saving Automatic Electric Water Boiler

- Double wall structure
- One piece structure for easy cleaning
- Twist-lock design on the lid and body
- Cool touch handles
- Water gauge indication and plastic tap
- Double overheat protection
- Automatic heating and keep warm features
- ON/OFF switch
- With 30-110 ℃ adjustable thermostat
- Brushed finish



28L
Code: 0100100350

35L
Code: 0100100351

50L
Code: 0100100352

60L
Code: 0100100353

100L
Code: 0100100354

120L
Code: 0100100355

Code	Dimension(mm)	Tank Capacity	No. of water tap	Output	Voltage	Power
0100100350	405x360x740	28 L	1 pc	40 L/ Hr	220v /50hz	3kw
0100100351	405x360x840	35 L	2 pc	65 L/ Hr	380v /50hz	6kw
0100100352	450x400x920	50 L	2 pc	95 L/ Hr	380v /50hz	9kw
0100100353	450x400x1020	60 L	2 pc	120 L/ Hr	380v /50hz	12kw
0100100354	556x455x1100	100 L	2 pc	140 L/ Hr	380v /50hz	15kw
0100100355	556x455x1200	120 L	2 pc	150 L/ Hr	380v /50hz	18kw

Automatic Water boiler

- Automatic temperature monitoring electronic system, automatically deal with abnormal conditions such as overtemperature, water shortage and full water.
- Full stainless steel shell and inner tank, beautiful and durable
- The water temperature can be maintained at 90 ℃~97 ℃
- Equipped with American brand TOMLINSON faucet
- Setting manual water adding and drainage for easy cleaning
- Water Inlet:DN15



Code: 0100100460



Code: 0100100462

Code	Dimension(mm)	Power	Voltage	Output	NW
0100100460	220 x 370 x 625	2.85 ~ 3.36 KW	220 ~ 240 V/ 50 Hz	44L/ hr	13 Kg
0100100462	340 x 225 x 631	2.85 ~ 3.36 KW	220 ~ 240 V/ 50 Hz	49.5L/ hr	11 Kg

NTSmart Tel.+86-20-89301818/28/38 CHINA nts@ntsmart.com
NTSmart Tel.+95-1-7534400 MYANMAR nts@ntsmyanmar.com.mm
NTSmart Tel.+66-2-8667474 THAILAND sales@ntsmart.co.th
NTSmart Tel.+255-22-2700674/75 TANZANIA ntstz@ntsmart.com






nts
MART






NTS MART

NTS MART CHINA

No.28 Daganwei Road, South of Gongye Dadao,
Haizhu Dist., Guangzhou, Guangdong, China
Tel: +86-20-89301818/28/38
Email: nts@ntsmart.com
Website: www.ntsmart.com

NTS MART THAILAND

161/735-740 Soi Charansanitwong 27 Lane
22 Charansanitwong Rd., Bangkhunsri, Bangkoknoi,
Bangkok 10700 Thailand
Tel: +66-2-8667474 (auto)
Email: sales@ntsmart.co.th
Website: www.ntsmart.co.th

NTS MART MYANMAR (Yangon)

No.(2), Shwe Gone Daing (2) Road, West Shwe
Gone Daing Quarter, Bahan Township, Yangon Myanmar
Tel: +95-1-7534400
Email: nts@ntsmyanmar.com.mm
Website: www.ntsmyanmar.com.mm

NTS MART MYANMAR (Mandalay)

Buliding (5),62th street, Between 38/39th,
Maha Aung Myay Township, Mandalay Myanmar
Tel: +95-9-775 966645
Email: nts@ntsmyanmar.com.mm
Website: www.ntsmyanmar.com.mm

NTS MART TANZANIA

Plots No. 66 Block'D', Msasani Village, Kinondoni
District, Dar es salaam, Tanzania
Tel: +255-22-2700674/75
Email: ntstz@ntsmart.com
Website: www.ntsmart.com

2021-2025
WWW.NTSMART.COM